INCIDENT PACK

A comprehensive guide with supporting paperwork for the Clerks of the Course, Stewards and other Officials who are involved with documenting and reporting on any incidents at a Motorsport UK Event.

01.03.2024_Ver_7.0

Contents

motorsport UK

A guide on how to deal with incidents at Motorsport UK events.

Official's Notes - Please read and familiarise yourself with the process and considerations when dealing with any incident.

No.	Contents	(√)*
1	**Incident Management Process** A guide to assist Steward's and Officials in the handling of incidents.	
2	**Incident Definitions** A Guide to assist Clerks of the Course and Stewards in identifying reportable Incidents.	
3	**Incident Report Form**	☐
4	**Vehicle Reports (Car & Kart)** Remind the Chief Scrutineer that no dismantling is to be carried out unless done so with the agreement of the Coroner's Officer or appointed Vehicle Examiner.	☐
5	**Statements & Sketch of the scene & Contacts sheets** These may be filled out by the witness or transcribed from a verbal statement by a third party. A sketch showing the relative locations of the incident site and the witness is always useful. NOTE: Post Chief or Marshals reports are acceptable as presented.	☐
6	**Time Log** This form can be used if any alternative form or log has not already been used.	☐
7	**Record of photographic or video evidence** Details must be recorded of any of the above materials being used.	☐
8	**Guide to Motorsport UK** Supply this to any Coroner's officer, Police Officer, EHO, etc. that you feel may find it useful.	
9	**Guide on how to deal with the Media**	
10	**Post Incident Support**	

NOTE: Amended for Version 7.0

Notes for Officials

for any incident leading to fatal, critical or serious injury

We all hope that we will never have to deal with such an incident, but they inevitably do happen. As with anything else in life, planning and preparation will help you in dealing with a situation, which is never going to be easy and may also be distressing.

This pack has been provided both to help you prepare, as well as to help you deal with the situation should it arise. Please take the time to familiarise yourself with the content of this pack and to regularly read through it as a "refresher".

Remember that you will be working as a team with the Clerk of the Course and any other officials who may have a relevant input & role in the investigation. In the event of a fatality the enforcing authority has control of the situation, but remember that they may have no experience, or knowledge, of motorsport. They will generally welcome your assistance and support, working as a team will help all parties involved.

Officials' duties (as detailed in the Motorsport UK Yearbook)

Clerk of the Course

G5.1 The Clerk of the Course has overall responsibility for the general conduct and control of an event in accordance with the Regulations, Programme and Organising Permit.

G5.2.8 Ensure that every accident or incident involving a competing vehicle is reported to the Stewards of the Meeting and the Chief Scrutineer and that the Chief Medical Officer is informed if any Competitor is injured. The Competitor's Medical Certificate / Licence should be returned to Motorsport UK if the Chief Medical Officer considers it appropriate.

Stewards

G2.3.3 Stewards must initiate investigations into any incident or breach of Regulations they observe or is reported to them.

G2.4.2 Subject to G2.5 in the case of force majeure or for safety reasons, instruct the Clerk of the Course to postpone, abandon or stop an event or part of an event (except as provided for in Q5.4). Any such instruction must be formally recorded. Provided that an event is run in more than one heat or part, these powers may, if thought fit, be exercised in respect of one hear or part.

G2.5 The Stewards of a Meeting have another major function, to prevent unnecessary danger, and the Motorsport UK Steward has overriding authority in matters of safety, except where Motorsport UK has appointed a Safety Delegate, in which case the Safety Delegate shall have overriding authority in matters of safety.

Immediate response

If you become aware that you have a serious incident, the priority is to firstly deal with the medical response and then to preserve the scene, always ensuring that the environment is safe for the individuals providing the medical response. In some cases, very small details may help in establishing the cause of an incident and/or exactly what happened. It is therefore essential to cordon off the area as soon as possible; many clues can easily be lost by people trampling over an area. It may be that a vehicle must be cut – or in some way

manipulated – to release a casualty, this is an accepted fact. In principle the vehicle should be disturbed as little as possible, but the priority is clearly for the casualty. It is also important that you ensure the surrounding area is checked for displaced parts, scuff marks etc. and a sketch plan is prepared noting the location of such items.

If the incident is confirmed as a fatality, attendance by the police will be required who in turn will inform the Coroner's Officer (Procurator Fiscal in Scotland). Please confirm that this has been done in accordance with the Emergency Plan and obtain details of the person informed from the police.

You will also need to inform Motorsport UK (see contact details at end), the owner of the circuit / venue or the landowner.

Record of Events

At race meetings & rally events, Race or Rally Control will be maintaining an event log, which specifies the time of the incident, when the rescue unit was summoned etc. This is unlikely to be the case at other events such as sprints, hill climbs etc., so as soon as you are aware that you may have a fatality, ensure the organisers start and subsequently maintain a time log. A template for this is included in the pack (Section 6).

Gathering Information

Obtaining witness statements at the earliest opportunity is important but please be sensitive to individuals who have been deeply affected by the incident. Marshals, rescue crew, other competitors and those involved with motorsport should be able to provide clear & concise statements and should be approached as soon as possible once they have dealt with their immediate duties. There are blank witness statements in the pack (Section 5), however, a Post Chief's report or witness statement in another format is acceptable but should be signed. Witness statements should be limited to the facts and should not contain any opinion, limit these to; who, what, when & where and remember that these statements will be disclosable. Having the contact details of witnesses will also allow for a follow-up at a later date.

Remember there may be spectators, rescue teams and others who are able to offer video or photographic evidence of the incident in addition to providing written statements. If you are lucky enough to find a person with photographic or video evidence (including in-car / dash cam footage), we have usually found that they will be agreeable to providing a copy. There is a sheet included in this pack (Section 6) for listing the details of any photo and/or video evidence. Please utilise this under such circumstances. Asking spectators in the general area if they have photo or video evidence, or if they saw the incident will usually produce the best results. There are sheets provided in this pack for people providing written statements. Please ensure that all details are filled out and that each page is signed and dated. If a statement cannot be obtained, then taking names and addresses will help for future reference.

Check with competitors to establish if there is any 'in car' footage which is available.

Sketch of the Scene

Equally important is a reasonable quality sketch of the scene (Section 5) with reasonable dimensions. Witnesses may provide a sketch alongside their statements which show the path of vehicles and any other significant factors.

A sketch by an Official, who is investigating the incident which shows the vehicles as they came to rest, is important and will accompany any photographs. Remember to include permanent and easily identifiable features to provide a 'fix'. Skid marks and a note of where separated vehicle parts were found are also important. Please make sure all sketches are named, signed and dated in the spaces provided.

Taking photographs

It is good practice to always have a digital camera to hand, if not, then most people now carry smart phones with good quality cameras. Photographic evidence of the scene is very important. Use the sheet provided in this pack (Section 7) to note the details of any photographic evidence obtained, either by you or by others. You should forward the media to Motorsport UK. It is a wise precaution to use registered post or a receipted courier such as DHL for sending electronic media. It is also a good idea to keep copies of any documentation sent.

The more pictures you take at the scene, the better chance a few of them will come out well. Begin by taking general photographs of the entire scene to give an overall view of the accident scene. Take wide shots from several angles, including reference points (e.g. track furniture) which will help to pinpoint the exact location. Ensure that the photographs display the weather conditions at the time of the incident. Photograph all vehicles involved in the incident and show their proximity to each other. Get close-ups of all vehicles from different angles, specifically areas of damage, any signs of damage to the venue, any marks on the ground or barriers and photographs of any debris, also showing its proximity to the scene. Photographs showing persons located at the scene may also help to identify or place witnesses.

Post-incident scrutineering

In the event of a fatality, the vehicle(s) must not be moved until authorised by the Police or Coroner's Officer (Procurator Fiscal in Scotland). It is likely that arrangements will be made for a vehicle examiner to inspect the vehicle(s) either at the scene, or when the vehicle is in secure storage. Offer to the Police / Coroner's Officer / Procurator Fiscal the services of a Motorsport UK representative to assist the examiner. Many examiners will not have any experience of viewing competition cars and will be unfamiliar with their particular features. Most examiners welcome this assistance, which can be easily arranged by Motorsport UK.

In some cases, the Coroner's Officer / Procurator Fiscal will arrange storage of the vehicle. Alternatively, they may agree a location. If it is the Steward who impounds the vehicle then, if possible, it should be secured in a locked building, rather than being left under a tarpaulin in a locked yard. Please make note of where the vehicles are held and who is responsible for the keys.

The relevant (car or kart) post-accident report sheet(s), copies of which are included in this pack (Section 4), should be filled out accordingly. It is important that details of the casualty's protective clothing/equipment are noted, as well as details, including the condition, of the helmet.

In the immediate aftermath of the incident, please ensure that you obtain details of the scrutineer(s) who checked the car prior to the event, as well as those who will carry out post-accident checks. This should include relevant qualifications.

Relevant documentation

Please obtain any scrutineer, medical and rescue reports relating to the incident. It is also important to locate copies of any appropriate documentation relating to the injured/deceased i.e. entry forms, signing-on sheets, competition licence, etc.

The Incident Report Form (Section 3) allows you to record the details of key persons who are involved in the incident.

Enforcement agencies

Mention is to be made of the possible arrival on scene of a Local Authority EHO (Environmental Health Officer). This does not always happen, but in some areas the Local Authority run an out-of-hours service and an EHO may arrive. Your venue owner is likely to know whether this is the case or not. If such a person arrives, please offer assistance, friendly co-operation usually helps everyone involved.

It is possible that the Police may seize documents and photographic evidence. If this happens then please make sure you get a receipt detailing the name and number of the Police Officer responsible as well as details of exactly what has been seized and if possible, take photos or photocopies to keep an exact copy. Local Authorities and the Health & Safety Executive are entitled copies.

Some Police Officers and EHOs will have no idea of the structure of Motorsport UK-authorised motorsport. We have included within the pack a document which sets out in simple terms how things are organised and the relationships between all parties involved within Motorsport UK events. Please do not hesitate to pass over contact details of Motorsport UK staff if required, or even if you just think they will be useful.

It is possible that the Local Authority EHO may carry out a detailed investigation. As part of such an investigation they may wish to interview persons involved in, or who have witnessed the incident. Those not familiar with these processes may find this a daunting prospect, and therefore we have enclosed a copy of some notes that have been drawn up to give an insight into what is involved.

Contacting Motorsport UK

It is important that Motorsport UK be aware at as early an opportunity as possible that an incident has occurred. This can be done by contacting the following:

MOTORSPORT UK SAFETY TEAM – **NUMBER PRINTED ON REVERSE OF PERMIT**

If you are unlucky enough to get an answer service, please leave a simple message requesting an urgent call back made to ..... concerning a potentially serious incident at ....on .....

This will be enough to alert us to the subject of your call.

Responding to the Media

In the event of a serious incident you may receive enquiries from the media. A simple “no comment” or remaining silent is generally not constructive, and it is not appropriate to release the casualty’s identity or other personal details.

Please contact the Motorsport UK Communications Team at the soonest opportunity on the number provided within the ‘Guide to dealing with Media’ if the media have approached you for information. The Motorsport UK emergency number can also be used in order to contact the right people.

If you are pushed to give a response, a guide to recommended text can be found within the ‘Guide to dealing with Media’ document, which can be altered as required.

Proactive external communications

Depending on the circumstances, you may need to acknowledge the incident via your communications channels such as social media and your website. This is not an obligation and may be unnecessary to avoid undue attention. However, if the incident is in the public domain already, for example video or conversation is in circulation on social media, it may be appropriate to acknowledge it. This is a judgement call, and the Motorsport UK communications team are happy offer advice in that respect.

In the event of a death, the kin must be informed before any communications are released, and the communication, if required, should only acknowledge the incident with minimal information out of respect for the next of kin.

The below text can offer guidance and should be changed according to circumstances, but remember you do not have to use it, particularly if the incident is not already in the public domain:

"A serious incident has taken place during a ..... event being held at ....., affecting a driver/ official/ spectator. We are investigating the details of the incident and cannot give any further details at this time."

Conclusion

Remember that this is a team effort. It is essential that the Motorsport UK Steward, the Club Stewards and the Clerk of the Course work as a team and that in turn, this team works as a team with the Police or any other parties involved in the investigation. The organisers should ensure that the next of kin have been informed, and that if family and/or friends are present, somebody is delegated to look after them. It is no easy job to look after relatives, but generally there is somebody on "the team" who is instinctively better at these tasks than most, so utilise these skills. Nothing is worse than a relative knowing a family member has been seriously hurt or killed and simply being told the address of the hospital and then left to sort themselves out. There may also be officials or others who need support. Together with the organisers, try and ensure that these people's needs are recognised.

In the event that a foreign casualty is involved, please find out and make a note of next of kin and/or any person present with them in the UK. In the event of a fatality, arrangements to inform the relevant Embassy or Consulate should generally be taken care of by the Coroner's Officer, but be aware that this will need to happen.

Post incident support

Motorsport UK acknowledges that there may be occasions when its members could be involved with traumatic incidents, as competitors or in carrying out their duties as officials. To ensure that appropriate support is provided to these members, Motorsport UK has set up an arrangement with a service provider, who are able to provide critical incident support and a nationwide counselling service (Section 10).

Incident Management

A guide to assist Officials in how to handle a critical or serious incident

When a serious incident occurs

Assess the severity of the incident and whether the event needs to be stopped

↓

Ensure relevant information & communications are recorded

↓

Ensure medical support is at the scene or moving towards the scene

↓

Follow normal procedures for halting the event

↓

Preserve the scene and document / photograph the circumstances. If the severity of the incident warrants it, ring the Police

↓

In the event of a fatality, the police notify the coroner. You will inform the circuit owner / landowner

↓

Liaise with the police or other emergency services as requested

↓

Identify witnesses & other sources which will provide information relating to the incident. e.g. video footage, data loggers, etc.

↓

Document the circumstances of the incident including a sketch of the scene showing movement of vehicles

↓

Obtain all other relevant information from marshals, scrutineers, medics, etc.

↓

As soon as possible, contact Motorsport UK Safety Director & Motorsport UK Head of Communications.

↓

The police will notify the next of kin. The club will be asked to provide details.

Prior to leaving the event

Check documentation & contact details for all witnesses, medics & persons relevant to the incident

↓

Obtain receipts for any evidence which may have been seized by police and take copies

↓

Collect any photo or video evidence or arrange for it to be sent to you, for forwarding to Motorsport UK

↓

Hold a debrief with the official's team & offer post incident support for those who may require it

After the incident

- Do not discuss the circumstances of the incident except for the purpose of obtaining information
- Cooperate fully with emergency services or any enforcement agency
- Do not disclose any information on social media or to a third party other than enforcement agencies
- All media queries should be diverted to Motorsport UK Head of Communications

Taking witness statements

When taking witness statements, you should do so as quickly as possible after the event. Try to seek the information in a chronological order and limit to facts only.

When speaking to a witness:

- Make sure you use open questions which allow the witness to give their version of events, do not ask leading questions
- Where possible take individual statements from the witnesses so their account cannot be led by others
- Explain why you are taking the statements and that they may be used by the coroner or future court proceedings

What to cover:

- Details of all competitors involved at the time before the leave
- Ask those closest to comment on what they saw and heard. If possible, ask them to provide a brief witness statement - keep it factual
- If this cannot be achieved on the day, follow up verbally within 48 hours to ask for the statement/views
- Speak to others nearby that may have seen something
- Be sure to get names, addresses and phone numbers as tracking them down later may be difficult

In summary:

- Get a note of and follow up on absolutely everybody that may be relevant, no matter how minor
- Do it ASAP – memory fades and over time people may become more reluctant to say with any certainty what happened

Documents required by Motorsport UK post event:

- Incident Report
- Vehicle Report Form
- Witness Statements & Sketch of Scene
- Time Log
- Photographic or Video Evidence
- Contact details of enforcement agency staff e.g. Police, Coroner, EHO
- Completed Sign on sheets
- Medical & Rescue Team Reports

Incident Definitions

Triggers for reporting an incident to Motorsport UK

Following any incident, the Clerk of the Course must work closely with the CMO to assess the situation and determine which category it falls within.

A. Serious Incident

A1. Any incident that results in either a fatal or critical injury as defined below. When such an event occurs, the Clerk of the Course and Motorsport UK Steward must refer to the Motorsport UK Incident Pack and ensure that all information required is collected.

Fatal injury: *an incident that leads to a fatal outcome of an individual within 30 days of the incident.*

Critical injury: *any injury that leads to long term serious incapacitation or may lead to a fatality.*

A2. Any incident that the CMO has identified as causing a serious injury as defined below. When such an event occurs, the Clerk of the Course must complete an 'Incident Report form' and ensure that the information required is collected.

Serious injury: *Any injury that does not fall into the fatal or critical injury category but requires two or more nights in hospital.*

In both scenarios, the CMO must complete the 'Medical Statistics Sheet' and update the Clerk of the Course with any subsequent developments.

The Motorsport UK Steward or Senior Official where a Motorsport UK Steward is not appointed shall contact Motorsport UK via the emergency number found on the back of the permit to inform Motorsport UK of the Serious Incident immediately after being made aware.

Furthermore, any incident that involves a vehicle entering a spectator area or any injury to a member of the public, official or marshal must be reported, investigated and highlighted to Motorsport UK in the same way as litigation may follow.

B. Minor Incident

Any incident that leads to a minor injury of a competitor but is not considered serious, critical or fatal. When such event occurs, the CMO must complete the 'Medical Statistics Sheet', entering the injury code and update the Clerk of the Course.

Minor injury: *any incident that is treated on site or requires the individual to spend less than two nights in hospital.*

Concussion: *as defined by the Motorsport UK Concussion Policy.*

Should an individual suffer concussion, the CMO must note this on the 'Medical Statistics' so that Motorsport UK may remove the competitor's licence in line with the Motorsport UK Concussion Policy.

C. Incident 'near-miss' reporting

Any incident that does not falls into one of the categories above but could be categorised by one of the following triggers shall be recorded and submitted to Motorsport UK:

i. **Barrier contact** – any incident that results in significant contact with a safety barrier.

ii. **Other** - any incident that the Clerk of the Course or Steward deems had potential to cause a serious, critical or fatal injury.

Incident Report Form

motorsport UK

for any incident leading to fatal, critical or serious injury

General information

Date of incident:		Time of incident:	
Type of event:	☐ Autotest ☐ Autocross ☐ Rallycross ☐ Cross-Country ☐ Circuit Race ☐Rally ☐ Sprint ☐ Hill Climb ☐ Drag Race ☐ Trial ☐ Kart Other:		
Event status:		Permit no.:	
Organising club:			
Venue:			

Details of involved and / or impounded vehicle(s)

Competition no.:		Registration no.:	
Make & model:			
Driver:			

Competition no.:		Registration no.:	
Make & model:			
Driver:			

Competition no.:		Registration no.:	
Make & model:			
Driver:			

Competition no.:		Registration no.:	
Make & model:			
Driver:			

Location where vehicle(s) is/are impounded:	
Person responsible for safekeeping of vehicle(s):	
Contact telephone / email:	

Information supplied on this form will be processed in accordance with Motorsport UK Privacy Policy which can be found at www.motorsportuk.org/Data-Protection
Officials completing this form should be aware that the contents should not be shared outside of the Steward's event submission process.

Casualty details

Name	Licence no.	Attending as*

** Competitor / Marshal / Official / Employee / Spectator / Other …*

Details of other parties involved

Name	Contact no.	Involvement & capacity at meeting*

** Competitor / Marshal / Official / Employee / Spectator / Other …*

Details of any witnesses

Name	Contact no.	Capacity at meeting*	Statement attached

** Competitor / Marshal / Official / Employee / Spectator / Other …*

Details of Environmental Health Officer *(where applicable)*

Been notified: YES ☐ NO ☐ In attendance: YES ☐ NO ☐

Name:	
Local authority:	
Job title:	
Telephone / email:	

Information supplied on this form will be processed in accordance with Motorsport UK Privacy Policy which can be found at www.motorsportuk.org/Data-Protection
Officials completing this form should be aware that the contents should not be shared outside of the Steward's event submission process.

Police Been notified? YES ☐ NO ☐

Time notified: ☐ Attending? YES ☐ NO ☐

Name of officer:	
Telephone / email:	

Coroner/PF Officer Been notified? YES ☐ NO ☐

Time notified: ☐ Attending? YES ☐ NO ☐

Name:	
Telephone / email:	

Brief résumé of the incident (continue on additional sheets if necessary)

Details of Steward / Official completing this form

Name:			
Licence no.:			
Signed:		Date:	
		Time:	

Please ensure that this form is returned to Motorsport UK with the relevant Steward's Report

Information supplied on this form will be processed in accordance with Motorsport UK Privacy Policy which can be found at www.motorsportuk.org/Data-Protection
Officials completing this form should be aware that the contents should not be shared outside of the Steward's event submission process.

Post Incident Report

motorsport UK

To be completed for any CAR that requires a post incident check

General information

Date of incident:			
Type of event:	☐ Autotest ☐ Autocross ☐ Rallycross ☐ Cross-Country ☐ Circuit Race ☐Rally ☐ Sprint ☐ Hill Climb ☐ Drag Race ☐ Trial ☐ Kart Other:		
Organising club:			
Venue:			
Competitor:		Vehicle No.:	
Class:		Session:	
Make & model:		Video/data? :	

Vehicle Identification (Passport #, Registration Plate, etc.):	

Suspension:	LHF:		RHF:	
	LHR:		RHR:	
Wheels/tyres:	LHF:		RHF:	
	LHR:		RHR:	
Steering:				
Throttle:				
Brakes:				
ROPS:				
Bodywork:				

Fire extinguisher:	Make:		Condition:		Activated?	
Type (handheld/plumbed in):						
Fire extinguisher:	Make:		Condition:		Activated?	
Type (handheld/plumbed in):						

Information supplied on this form will be processed in accordance with Motorsport UK Privacy Policy which can be found at www.motorsportuk.org/Data-Protection
Officials completing this form should be aware that the contents should not be shared outside of the Steward's event submission process.

Inspection report – please mark clearly where the driver was seated

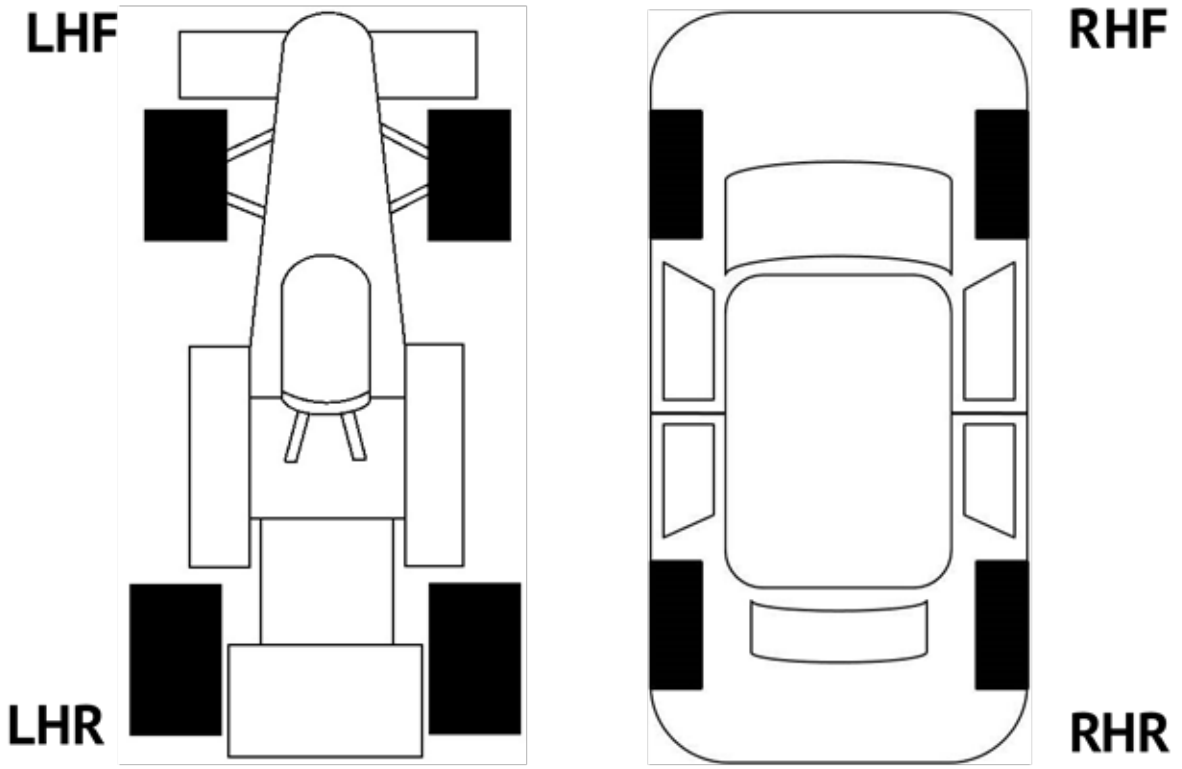

Indicate which areas and/or parts are damaged.
Please mark additional observations in 'Other Observations' section below.

No.	Description	? ✓
1		
2		
3		
4		
5		
6		
7		
8		
9		
10		
11		
12		
13		

Information supplied on this form will be processed in accordance with Motorsport UK Privacy Policy which can be found at www.motorsportuk.org/Data-Protection
Officials completing this form should be aware that the contents should not be shared outside of the Steward's event submission process.

Driver's equipment:				
Overalls:	Make:			
	Condition:			
Helmet:	Make:			
	Standard:		Sticker No.:	
	Condition:			
Shoes / Gloves:				
FHR device:			Sticker No.:	
Seat (& mounts):	Make:		FIA Homologation:	
Harness:	Make:		FIA Homologation:	

Co-driver's equipment (if applicable):				
Overalls:	Make:			
	Condition:			
Helmet:	Make:			
	Standard:		Sticker No.:	
	Condition:			
Shoes / Gloves:				
FHR device:			Sticker No.:	
Seat (& mounts):	Make:		FIA Homologation:	
Harness:	Make:		FIA Homologation:	

Details of Scrutineer Scrutineering vehicle:	

Details of Scrutineer completing this form:

Name:		Licence no.:	
Signed:		Date / Time:	

Chief Scrutineer report verification:

Name:		Licence no.:	
Signed:		Date / Time:	

Please ensure that this form is returned to Motorsport UK with the relevant Steward's Report.

Information supplied on this form will be processed in accordance with Motorsport UK Privacy Policy which can be found at www.motorsportuk.org/Data-Protection
Officials completing this form should be aware that the contents should not be shared outside of the Steward's event submission process.

Other observations:	

Information supplied on this form will be processed in accordance with Motorsport UK Privacy Policy which can be found at www.motorsportuk.org/Data-Protection
Officials completing this form should be aware that the contents should not be shared outside of the Steward's event submission process.

Post Incident Report

To be completed for any KART that requires a post incident check

General information

Date of incident:			
Organising club:			
Venue:			
Competitor:		Comp. No.:	
Class:			
Session:			
Make & model:			

Inspection report

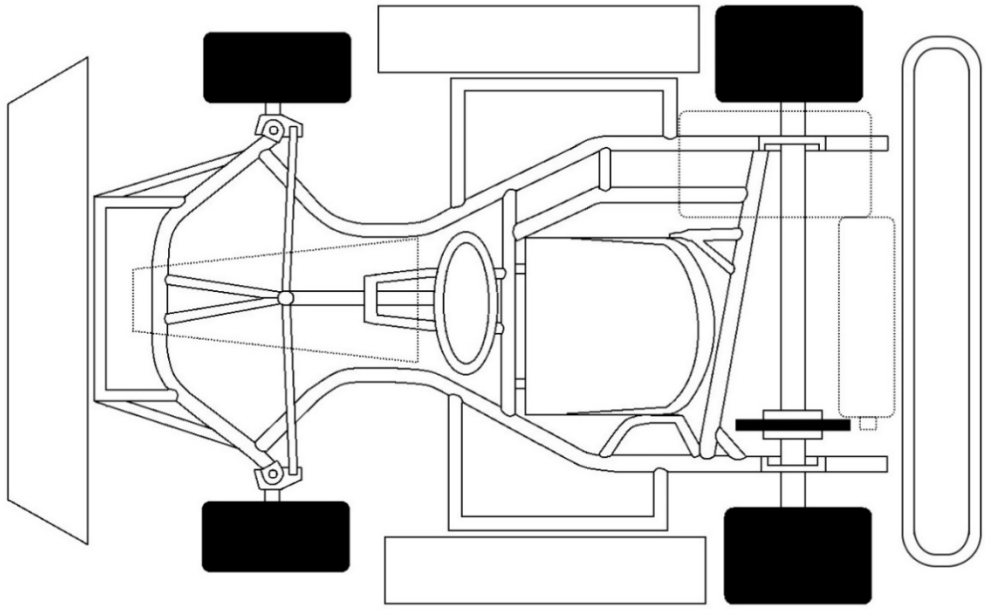

Indicate which areas and/or parts are damaged

Vehicle:	
Chassis:	
Steering:	
Wheels/tyres:	
Brakes:	

Information supplied on this form will be processed in accordance with Motorsport UK Privacy Policy which can be found at www.motorsportuk.org/Data-Protection
Officials completing this form should be aware that the contents should not be shared outside of the Steward's event submission process.

Controls:	
Seat and mounts:	
Bumpers:	
Bodywork:	
Fuel system:	
Engine:	
Transmission:	
Cooling system:	

Driver's equipment:				
Overalls:	Make:			
	Condition:			
Helmet:	Make:			
	Standard:		Sticker:	
	Condition:			
Shoes:				
Gloves:				
Rib protector:				
Neck Brace:				

Other observations:

Details of scrutineer scrutineering the kart during the event:	

Details of person completing this form

Scrutineer:		Licence no.:	
Signed:		Date:	
		Time:	

Please ensure that this form is returned to Motorsport UK with the relevant Steward's Report

Information supplied on this form will be processed in accordance with Motorsport UK Privacy Policy which can be found at www.motorsportuk.org/Data-Protection
Officials completing this form should be aware that the contents should not be shared outside of the Steward's event submission process.

Statement

motorsport UK

for any incident leading to fatal, critical or serious injury

General information

Date of incident:		Time of incident:	
Type of event:	☐ Autotest ☐ Autocross ☐ Rallycross ☐ Cross-Country ☐ Circuit Race ☐Rally ☐ Sprint ☐ Hill Climb ☐ Drag Race ☐ Trial ☐ Kart Other:		
Venue:			

Details of person making the statement

Name:		ID No.:	
Address:			
Telephone:		Email:	
Attending as:*	Competitor / Marshal / Official / Employee / Spectator / Other		

* *Indicate as applicable*

Statement

Page **1** of __

continue overleaf...

Information supplied on this form will be processed in accordance with Motorsport UK Privacy Policy which can be found at www.motorsportuk.org/Data-Protection
Officials completing this form should be aware that the contents should not be shared outside of the Steward's event submission process.

Page **2** of __

Please include sketches where possible – separate sheet included. Continue as necessary on further sheets, clearly marking each as a continuation sheet. Sign and date each additional sheet immediately below the final line of writing.

Name:			
Signed:		Date:	
		Time:	

Please ensure that this form is returned to Motorsport UK with the relevant Steward's Report

Information supplied on this form will be processed in accordance with Motorsport UK Privacy Policy which can be found at www.motorsportuk.org/Data-Protection
Officials completing this form should be aware that the contents should not be shared outside of the Steward's event submission process.

Continuation Sheet	
	Page __ of __

Information supplied on this form will be processed in accordance with Motorsport UK Privacy Policy which can be found at www.motorsportuk.org/Data-Protection
Officials completing this form should be aware that the contents should not be shared outside of the Steward's event submission process.

Continuation Sheet	
	Page __ of __

Information supplied on this form will be processed in accordance with Motorsport UK Privacy Policy which can be found at www.motorsportuk.org/Data-Protection
Officials completing this form should be aware that the contents should not be shared outside of the Steward's event submission process.

Incident Sketch

for any incident leading to fatal, critical or serious injury

The sketch should detail:

- *Movement of vehicles & resting positions*
- *Location of any significant markings i.e. skid marks, barrier impact.*
- *Location of any debris*
- *Location of driver if not in vehicle*
- *Location and identification of marshals*

Name:			
Signed:		Date:	
		Time:	

Please ensure that this form is returned to Motorsport UK with the relevant Steward's Report

Information supplied on this form will be processed in accordance with Motorsport UK Privacy Policy which can be found at www.motorsportuk.org/Data-Protection
Officials completing this form should be aware that the contents should not be shared outside of the Steward's event submission process.

Contact Details

motorsport UK

for any incident leading to fatal, critical or serious injury

Name:	
Telephone / email:	
Attending as:*	

Name:	
Telephone / email:	
Attending as:*	

Name:	
Telephone / email:	
Attending as:*	

Name:	
Telephone / email:	
Attending as:*	

Name:	
Telephone / email:	
Attending as:*	

Name:	
Telephone / email:	
Attending as:*	

Name:	
Telephone / email:	
Attending as:*	

** Competitor / Marshal / Official / Employee / Spectator / Other …*

Please ensure that this form is returned to Motorsport UK with the relevant Steward's Report

Information supplied on this form will be processed in accordance with Motorsport UK Privacy Policy which can be found at www.motorsportuk.org/Data-Protection
Officials completing this form should be aware that the contents should not be shared outside of the Steward's event submission process.

Time Log of Actions

motorsport UK

for any incident leading to fatal, critical or serious injury

This sheet is intended to assist with maintaining a record of the actions which will take place after a fatal, critical or serious incident. **At race, rally or other events where a continuous log is maintained, completion of this document is not necessary – a copy of the event log will suffice**; however, you may still find it useful as a guideline of the actions and information required.

It is of importance to record such actions (including the time they were made) as when the incident occurred, when the rescue unit/doctor/paramedic were summoned to the scene, when external assistance e.g. an Ambulance was summoned, when the Police were informed, what time a Police Officer attended, etc.

General information

Date of incident:		Time of incident:	
Type of event:	☐ Autotest ☐ Autocross ☐ Rallycross ☐ Cross-Country ☐ Circuit Race ☐Rally ☐ Sprint ☐ Hill Climb ☐ Drag Race ☐ Trial ☐ Kart Other:		
Event status:		Permit no.:	
Organising club:			
Venue:			

Time log sheets

Number of time logs sheets attached:	

Details of person completing this form

Name:			
Telephone / email:			
Signed:		Date:	
		Time:	

Please ensure that this form is returned to Motorsport UK with the relevant Steward's Report

Information supplied on this form will be processed in accordance with Motorsport UK Privacy Policy which can be found at www.motorsportuk.org/Data-Protection
Officials completing this form should be aware that the contents should not be shared outside of the Steward's event submission process.

Time log sheet

Time (24hr)	**Source**	**Detail**

Page ____ of ____

Information supplied on this form will be processed in accordance with Motorsport UK Privacy Policy which can be found at www.motorsportuk.org/Data-Protection
Officials completing this form should be aware that the contents should not be shared outside of the Steward's event submission process.

Time log sheet

Time (24hr)	**Source**	**Detail**

Information supplied on this form will be processed in accordance with Motorsport UK Privacy Policy which can be found at www.motorsportuk.org/Data-Protection
Officials completing this form should be aware that the contents should not be shared outside of the Steward's event submission process.

Time log sheet

Time (24hr)	**Source**	**Detail**

Information supplied on this form will be processed in accordance with Motorsport UK Privacy Policy which can be found at www.motorsportuk.org/Data-Protection
Officials completing this form should be aware that the contents should not be shared outside of the Steward's event submission process.

Photo & Video Evidence

motorsport UK

for incidents leading to fatal, critical, or serious injury

Please clearly label any cameras, sets of photographs, discs, USBs etc. that are to be sent to Motorsport UK and then reference them accordingly on this form with all the relevant details present.

[Labelling can be in simple numerical form (1, 2, 3…) or any other sensible form that you may deem appropriate.]

Label details:		When taken:	
Name:			
Address:			
Telephone / email:			

Label details:		When taken:	
Name:			
Address:			
Telephone / email:			

Label details:		When taken:	
Name:			
Address:			
Telephone / email:			

Label details:		When taken:	
Name:			
Address:			
Telephone / email:			

Label details:		When taken:	
Name:			
Address:			
Telephone / email:			

Please ensure that this form is returned to Motorsport UK with the relevant Steward's Report

Information supplied on this form will be processed in accordance with Motorsport UK Privacy Policy which can be found at www.motorsportuk.org/Data-Protection
Officials completing this form should be aware that the contents should not be shared outside of the Steward's event submission process.

Label details:		When taken:	
Name:			
Address:			
Telephone / email:			

Label details:		When taken:	
Name:			
Address:			
Telephone / email:			

Label details:		When taken:	
Name:			
Address:			
Telephone / email:			

Label details:		When taken:	
Name:			
Address:			
Telephone / email:			

Label details:		When taken:	
Name:			
Address:			
Telephone / email:			

Label details:		When taken:	
Name:			
Address:			
Telephone / email:			

Please ensure that this form is returned to Motorsport UK with the relevant Steward's Report

Information supplied on this form will be processed in accordance with Motorsport UK Privacy Policy which can be found at www.motorsportuk.org/Data-Protection
Officials completing this form should be aware that the contents should not be shared outside of the Steward's event submission process.

Motorsport UK

guide to the authorisation & organisation of motor sport events

The world-wide authorising body for motorsport is the Federation Internationale de L'Automobile (FIA) which devolves its authority in each country through a national body, known as an ASN. The ASN in the UK is the Royal Automobile Club Motor Sports Association Ltd, trading as Motorsport UK. Each ASN is responsible for motorsport activities in its own country with international events organised in compliance with the regulations of the FIA and national events in compliance with its own regulations. National regulations may differ in detail but follow the principles of the FIA regulations.

It should be noted that whilst this structure is in place and covers motorsport right across the spectrum from Formula One to kart racing, there is a significant amount of motorsport which takes place world-wide outside the authority of the FIA and its designated ASN's.

In the UK there are in excess of 700 motor clubs who are affiliated to Motorsport UK, each of which pays an annual affiliation fee and undertakes to organise events in accordance with the regulations and requirements of Motorsport UK. These Regulations are documented in Motorsport UK's Yearbook.

A club wishing to organise an event must first apply to Motorsport UK for an Organising Permit, submitting draft event regulations with their application. If running a road rally, they also need to apply for authorisation under the Road Traffic Act.

For kart, race and speed events the venue to be used must be inspected by Motorsport UK and if found satisfactory a Track Licence will be issued. For stage rallies, the stage layout diagrams must be submitted to Motorsport UK where they are checked against regulations and when approved a copy is held on file and a copy supplied to the Motorsport UK Steward, where one is appointed (most, but not all stage rallies have a Motorsport UK Steward appointed).

There are key officials appointed to any event regardless of its type or status:

- The Secretary of the Meeting primarily deals with paperwork matters.
- The Clerk of Course has overall responsibility for the organisation and management of the event. It is their responsibility to ensure that the event is run in accordance with the regulations and in an acceptably safe manner. For some disciplines Clerks of Course are licensed by Motorsport UK and are required to undertake training before a licence is issued. Licences are graded with a structured progression according to the status of event.
- The Chief Scrutineer is responsible for checking vehicles prior to their participating in the event. This check is intended within the facilities and time available (nominally 6 minutes per vehicle) to compare the car to the relevant regulations and to consider items of basic safety such as the integrity of the structure, steering, braking and suspension systems, the presence and satisfactory condition of safety equipment such as seats, safety harnesses, roll cages etc. All scrutineers must be Motorsport UK licensed and, as with Clerks of Course, are required to undergo training prior to being granted a licence and in order to maintain that licence must attend other courses and maintain a minimum level of activity.
- The Chief Timekeeper is responsible for the timing of the event, where this is required, and is trained and licensed on the same principles as Clerks of Course and scrutineers.

A number of unlicensed officials have responsibilities, such as the Chief Marshal who recruits marshals and allocates them to positions. Whilst licensing is not compulsory, many marshals are licensed, and a considerable

amount of training is undertaken by all marshals. The chief marshal may well appoint other chiefs to work under his authority and to be responsible for defined areas of operation.

For all race, kart, speed and stage rally events requirements are laid down for the attendance of ambulances, qualified first aid staff and medical officers. The medical officers may be doctors registered with the GMC or paramedics registered with the HCPC. The number of medical officers is defined for each type of event. For all race, stage rally and higher status speed events there is also a requirement for one or more (depending on the event) Motorsport UK approved rescue units to be in attendance, this being crewed by Motorsport UK licensed personnel who have to undergo training prior to being licensed and then maintain a level of activity and participate in ongoing training and assessment sessions to maintain their licence.

For stage rallies, particularly for multi-venue events, a Stage Commander will oversee the stage, reporting to the Clerk of Course and undertaking the Clerks duties on the stage. For single venue stage rallies it is less likely that there will be a stage commander. In order to maintain communications on stage rallies, approved radio operators are stationed around the stage thus ensuring the Clerk of Course / Stage Commander are kept fully informed, that these officials can instruct other officials, rescue units and medical officers may be summoned to an incident etc.

Competitors wishing to participate in race, stage rally, kart and speed events are required to hold a Motorsport UK Competition Licence of the appropriate grade and status. In order to obtain such a licence, which is issued annually against application, competitors must be medically fit. In some cases a medical examination is required, otherwise in common with life assurance practice a system of self-certification is used. In all disciplines a graded structure of licence is imposed so that competitors must prove their competence in lower status events before being allowed to move on to higher status events. For some disciplines there is a mandatory training course prior to issue of licence, in others participating in such training courses is encouraged.

For all but a limited number of events, Motorsport UK appoints a Steward to each event. Motorsport UK appointed Steward serves as chairman of a panel of stewards, there also being two stewards appointed by the organising club. The Stewards are there to deal with judicial matters arising out of the meeting and to carry out an “auditing function” to ensure that the organisers are running the event in compliance with Motorsport UK Regulations and requirements. The Motorsport UK Steward checks the competition course prior to allowing the competition to commence.

A master insurance policy is arranged by Motorsport UK which provides organisers, venue owners, promoters, Motorsport UK and competitors protection against third party claims. Inter competitor claims are specifically excluded by this policy. The fundamental condition of this policy is that events be organised in accordance with the Regulations and requirements of Motorsport UK.

Motorsport UK Regulations have been developed over many years and draw on the experience of not only Motorsport UK but also world-wide experience of the FIA. The Motor Sports Council approves all Motorsport UK Regulations which are formulated and reviewed with the assistance of Motorsport UK employed executives by specialist committees. Each of these groups comprises of suitably experienced and qualified personnel. Included in the committees are Race Committee, Rallies Committee, Safety Committee, Medical Committee, Technical Committee, Kart Committee, etc. Regulations exist primarily to ensure that competitors compete on a ‘level playing field’ and that they do so safely for many of the regulations are imposed as part of Motorsport UK risk management structure.

Any activity contains an element of risk, motorsport is no different. It is the policy of Motorsport UK to operate based on continual review and development in order to ensure that the risks inherent in motorsport are adequately managed to the highest possible level.

Media Guide

A guide on how to deal with the media

In the event of a serious incident, you may receive enquiries from the media outlets such as local newspapers, radio stations, broadcasters and digital websites, depending on the nature of the incident.

Please follow the guidance below on how to respond:

- A simple "no comment" or remaining silent is generally not constructive for any parties.
- It is not appropriate to release identity details, the nature of the incident or other details.
- You should acknowledge enquiries and explain that investigations are currently underway, and you cannot comment on the situation until all the details are known. Having a reason for not giving information is always important in order to maintain trust but reassure the media that once details are known, you will communicate appropriately.
- To build a good relationship of trust with media you should aim to present yourself as open and honest, rather than obstructive and blunt.
- In any serious incidents, the media are often respectful and understanding so treat them like normal people.

If the media have approached you for comment, please contact the Motorsport UK Communications Team at the earliest opportunity who can provide you with assistance and guidance. The Motorsport UK emergency number can also be used in order to contact the right people.

If you are pushed to give a response, recommended text is below which can be amended as required. Depending on the circumstances it may not be appropriate to direct all further enquiries to Motorsport UK, and it may be an incident which can be dealt with by yourselves, so the wording of your statement should reflect that. We will of course offer as much advice as is required in those circumstances.

"A serious incident has taken place during a ..... event being held at ....., affecting a driver/ official/ spectator.

"Along with governing body Motorsport UK, we have initiated a full investigation into the circumstances of the incident. ...OR... The event was organised by Motorsport UK who have initiated a full investigation into the circumstances of the incident.

"We cannot comment on any specific details of this incident until the investigation has been carried out. For further enquiries contact the Motorsport UK Communications team."

Post Incident Support

For Motorsport UK Competitors & Officials

Motorsport UK acknowledges that there may be occasions when its members could be involved with traumatic incidents, as competitors or in carrying out their duties as officials. To ensure that appropriate support is provided to these members, Motorsport UK has set up an arrangement with a service provider, **Health Assured,** who are able to provide critical incident support and a nationwide counselling service.

Access to **Health Assured** services will be coordinated by Motorsport UK who will liaise with event organisers to ascertain details of persons involved in dealing with serious incidents and ensure that support services are put in place as rapidly as possible. This cover is provided to all signed on competitors and officials at Motorsport UK permitted events (including those with a certificate of exemption) except for medical personnel.

The process for arranging critical incident support & counselling services is as follows:

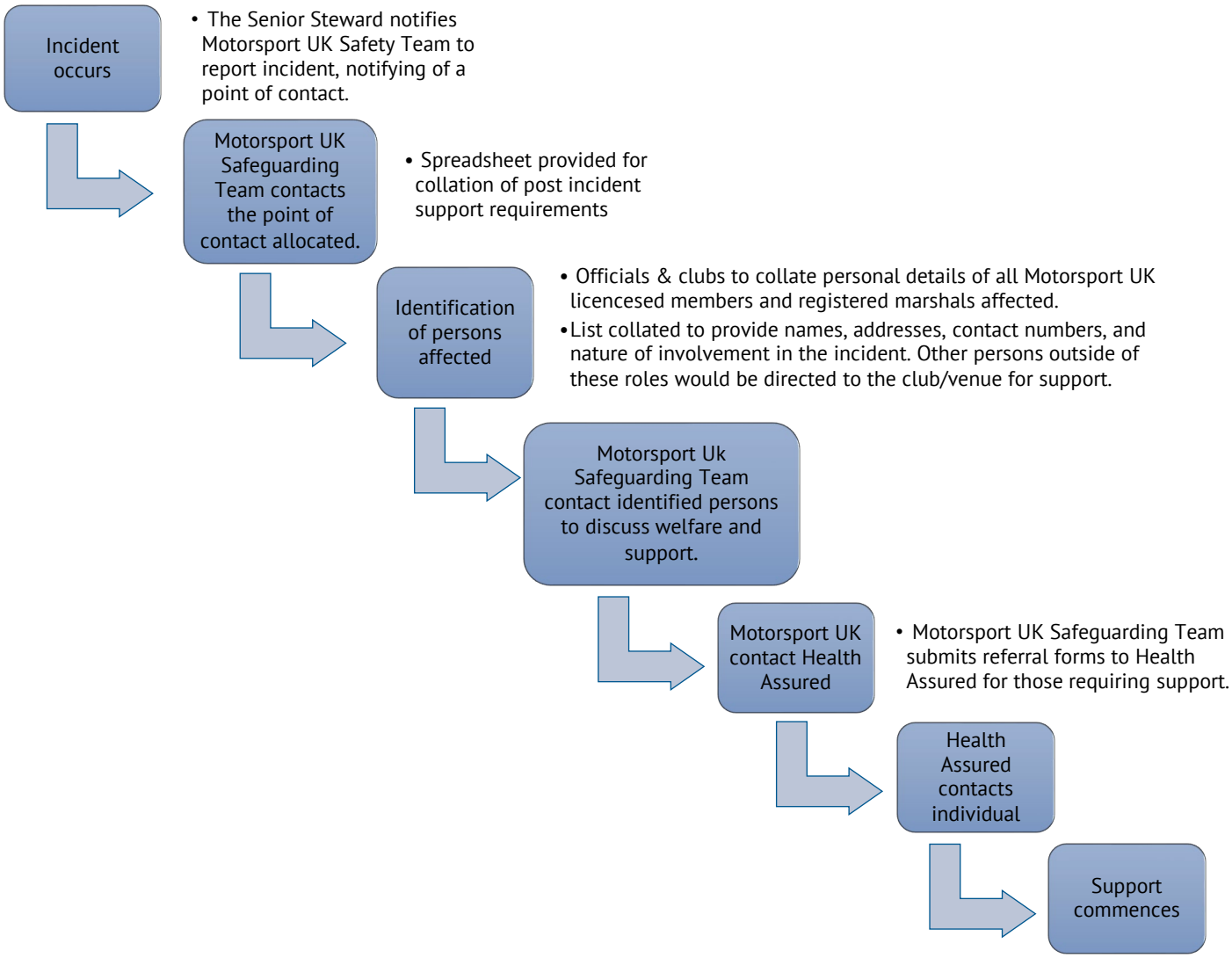

There is no obligation on Motorsport UK members to initially accept the support offered to them, however, they may later decide that they do require the services offered and should contact the Motorsport UK Safeguarding Team. A referral to Heath Assured for counselling support following an incident at a Motorsport UK permitted event, does not constitute any admission of liability my Motorsport UK.