QUALIFYING

JUN F ALL 333 (15 competitors)

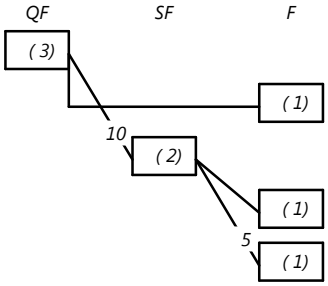

Quarter Finals
Final
Semi Final
Final
Final

JUN F ALL 222 (15 competitors)

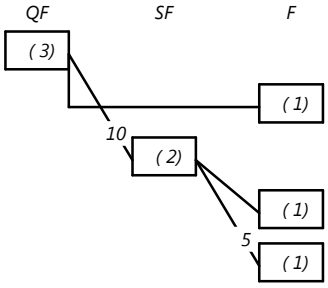

Quarter Finals
Final
Semi Final
Final
Final

JUN E WOM 500 (20 competitors)

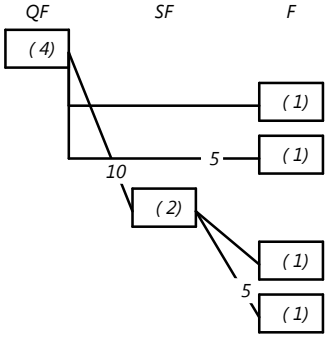

Quarter Finals
Final
Final
Semi Final
Final
Final

JUN E WOM 333 (20 competitors)

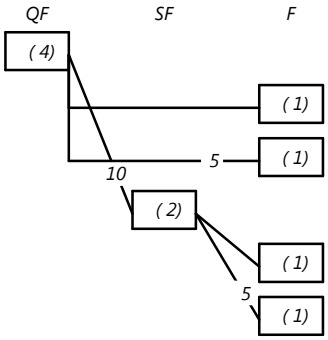

Quarter Finals
Final
Final
Semi Final
Final
Final

QUALIFYING

JUN E MEN **500** **(19 competitors)**

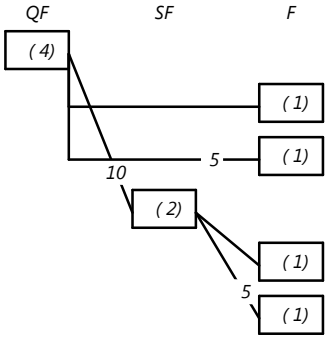

Quarter Finals
Final
Final
Semi Final
Final
Final

JUN E MEN **333** **(19 competitors)**

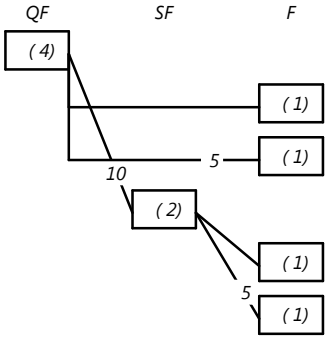

Quarter Finals
Final
Final
Semi Final
Final
Final

JUN E **R13G** **(0 competitors)**

Final

JUN F **R13G** **(0 competitors)**

Final