REGULATIONS

Dumfries & Galloway COUNCIL

JAS P WILSON FOREST MACHINES

ASSET ALLIANCE GROUP | SRC

motorsport uk Scottish Rally Championship

MONOSCOPE 2026 NORTHERN HISTORIC GRAVEL RALLY CHAMPIONSHIP RALLY CAR REGISTER

NATIONAL MOTORSPORT WEEK
POWERED BY motorsport uk
9-19 JULY 2026

ASSET ALLIANCE GROUP

ASSET ALLIANCE GROUP IS DELIGHTED TO BE SUPPORTING THE RSAC SCOTTISH RALLY

We wish all Spectators, Drivers, Co-drivers and Support teams **a great weekend of motorsport action!**

COMMERCIAL VEHICLE • BUS & COACH • CONTRACT HIRE
LEASING • RENTAL • GENERAL ASSET FINANCE

WWW.ASSETALLIANCEGROUP.CO.UK

RSAC Motorsport

FOREWORD

For our eightieth event, the organisers of the RSAC Scottish Rally aim to offer competitors a challenging event over some of the best stages in Scotland, and we extend a warm welcome to competitors from Scotland, England, Ireland, Wales and further afield.

We were delighted to receive the Coogie Urquhart Quaich for the event voted by the competitors as the best round of the 2025 Asset Alliance Group Motorsport UK Scottish Rally Championship, and we shall be doing our best to retain the trophy this year.

The rally will feature:

- 44 miles of stages on Forestry land, which are in outstanding condition. We have worked closely with Forestry and Land Scotland to ensure that only stages of good quality are used, and we are grateful for the support of their engineering team for the work they have done at our request.
- A competitive entry fee which includes a service plate and the provision of a tracking device.
- A return to our rally base at Jas P Wilson Forest Machines in Dalbeattie. This year the start and finish will again both be located there, as well as two visits to the service park, which we hope will prove popular with competitors.
- Testing opportunities before the event, run by John Parker Associates.

We are pleased to be a round of the Asset Alliance Group Motorsport UK Scottish Rally Championship and the HRCR Motoscope Northern Historic Gravel Championship. We are also pleased to welcome our friends from the UK Armed Forces Rally Team, whose Land Rovers have been part of the event since 1963.

Iain Wilson, Director of Jas P Wilson Forest Machines, will be known to many competitors as a regular participant in Scottish Rally Championship events, and we are extremely grateful to him and his colleagues for their support of the event, their encouragement and their willingness to provide all the necessary facilities.

For the twenty-ninth time, we will be supported by Dumfries and Galloway Council. We believe that this is the longest-running partnership between a rally and a local authority anywhere in Britain, with the Council supporting over one-third of all the Scottish Rallies run since the first one back in 1932. We are pleased to be one of the Council's 'Signature Events', which cover everything from Burns Suppers to arts festivals and World Championship ice hockey. We are also pleased to acknowledge the close interest taken by the Lord Lieutenant, the Council Leader, its Communities Committee and so many different Council departments.

We are sorry that it has been necessary to increase entry fees (in line with other events) to cover a further rise in forestry charges. We have tried to keep this increase to a minimum.

We continue to work hard to ensure that the rally is run to the highest safety standards, with the safety of competitors, officials and spectators of paramount importance. We rely on the help of many volunteers to ensure that the rally runs smoothly and safely. The members of our organising team work hard throughout the year, and we are very grateful to them. Many hundreds of volunteer officials, safety and radio crews, and marshals all do a superb job. We are proud to be associated with you all, and with Police Scotland, Forestry and Land Scotland and other landowners.

We look forward to welcoming you to Dumfries and Galloway in July, and wish you a safe and successful rally.

The Organising Team

RSAC SCOTTISH RALLY 2026

REGULATIONS

Article 1 Announcement

1.1 RSAC Motorsport Limited (The Organisers) will organise and promote an Interclub Permit Special Stage Rally – the **RSAC Scottish Rally** – on Saturday 18 July 2026. The event is supported by Dumfries and Galloway Council.

The event is a qualifying round of the following championships:

- Asset Alliance Group Motorsport UK Scottish Rally Championship (Motorsport UK Permit Number CH2026/RALLY004 (B)) and associated bonus schemes
- HRCR Motoscope Northern Historic Gravel Rally Championship (Motorsport UK Permit Number CH2026/RALLY019 (D))

Article 2 Jurisdiction

2.1 The event will be held under:

- The 2026 National Competition Rules of Motorsport UK (incorporating the provisions of the International Sporting Code of the FIA)
- The Motor Vehicles (Competitions and Trials) (Scotland) Regulations 1976 (as amended)
- The various Regulations issued by the Championships of which this event is a part
- These Supplementary Regulations
- Any written instructions the Organisers may issue for the event

Article 3 Authorisation

3.1 Motorsport UK Permit Number: TBA

3.2 Scottish Government Authorisation Number: TBA

Article 4 Eligibility

4.1 The event is open to Drivers and Entrants holding a licence issued by Motorsport UK. Drivers and Co-drivers must hold a licence valid for an Interclub stage rally. All crew members must meet one of the following criteria:

- Fully elected members of the promoting Club
- Fully elected members of Clubs which are members of the following associations
  Scottish Association of Motor Sports Clubs
  Association of North East & Cumbria Car Clubs
  Association of Northern Ireland Car Clubs
- Fully elected members of the British Army Motorsports Association
- Registered Competitors in the Asset Alliance Group Motorsport UK Scottish Rally Championship who hold a valid Competition Licence issued by Motorsport UK, or by the ASN of a country which is an EU (or comparable) country
- Registered Competitors in the HRCR Motoscope Northern Historic Gravel Rally Championship

4.2 Competitors are reminded of Motorsport UK's requirements for Entrants' Licences as laid down on the Licence Declaration Form and in the current Motorsport UK National Competition Rules.

4.3 Where the Entrant is a legal entity, or in any case not part of the crew, the named driver on the entry form will be held solely responsible for all liabilities and obligations of the entrant throughout the event.

4.4 The RSAC Scottish Rally has been inscribed on the 2026 FIA International Sporting Calendar, under the heading 'National Competition with Authorised Foreign Participation' (NCAFP), therefore competitors from any one of the European Union (or comparable) countries holding National Competition Licences issued by those countries may enter**.**

Article 5 Format

5.1 The programme of the meeting will be as follows:

PUBLICATION OF REGULATIONS:
Wednesday 10 June 2026
Regulations will only be available in electronic form on the event website
www.scottishrally.co.uk

OPENING DATE FOR ENTRIES:
Wednesday 10 June 2026 18:00 hours

CLOSING DATE FOR ENTRIES:
Tuesday 7 July 2026 18:00 hours
Entries can only be accepted via the link on the website www.scottishrally.co.uk
Anyone unable to access this site should telephone the Rally Office on 07774 788844 for further instructions.

DATE FOR ISSUING THE ROAD BOOK:
Friday 10 July 2026 (download only)

SOUND TEST AND COLLECTION OF MATERIAL AND DOCUMENTS
Jas P Wilson Forest Machines, Coast Road, Dalbeattie, DG5 4QU.
Friday 17 July 2026 15:00 hrs to 20:30 hrs

SCRUTINEERING
Jas P Wilson Forest Machines, Coast Road, Dalbeattie, DG5 4QU.
Friday 17 July 2026 15:30 hrs to 21:00 hrs

PUBLICATION OF START LIST:
Online by Sportity
Friday 17 July 2026 22:00 hrs

START
Jas P Wilson Forest Machines, Coast Road, Dalbeattie, DG5 4QU.
Saturday 18 July 2026 09:00 hrs

FINISH AND PRIZE-GIVING:
Jas P Wilson Forest Machines, Coast Road, Dalbeattie, DG5 4QU.
Saturday 18 July 2026 17:00 hrs

PUBLICATION OF PROVISIONAL RESULTS:
Online by Sportity.
As soon as possible following the finish of the event

OFFICIAL NOTICE BOARD:
Online by Sportity and available at https://www.scottishrally.co.uk/VNB2026

Article 6 Classes

6.1 The event will be divided into the following classes:

Motorsport UK Class	***Description***
1, 2 & 4	Homologated (and formerly homologated) FIA Rally 2 and R5 cars and any variants FIA S2000 specification cars and any variants (including all turbo conversions) All World Rally cars (must comply with their homologation) All 4-wheel drive cars over 2000 cc not eligible for Class 1 and 4 Homologated FIA Rally 3 cars and Group N4 cars that still comply with their homologation
3	2-wheel drive cars with normally aspirated engines over 2000 cc or forced induction engines over 1500 cc. Homologated (and formerly homologated) FIA RGT cars.
5, 6 & 7	Homologated FIA Rally 4 and R2 cars with forced induction that still comply with their homologation Cars with normally aspirated engines over 1600 cc up to and including 2000 cc or forced induction engines up to and including 1500 cc Homologated FIA Rally 5 and Rally 5-Kit cars.
8	Cars with normally aspirated engines over 1400 cc up to and including 1600 cc, including R2, or forced induction engines up to and including 1000 cc
9	Cars with normally aspirated engines up to and including 1400 cc
10, 11, 12 & 13	Rally Start: Cars that meet the current technical specification of Rally First plus Road Rally cars as per Ch.13 App.15 Art.1 Cars up to and including 1000 cc that meet the current technical specification of Formula 1000
16	Land Rover Wolf
H1	Historic Category 1 cars
H2, H3 & H4	Historic Category 2 cars
H5, H6 & H7	Historic Category 3 cars
H8	All Historic Category 3 cars having engines with both more than one camshaft and more than two valves per cylinder. All cars with a Rotary Engine
H9	Historic Category 4 cars up to 1300 cc
H10 & H11	Historic Category 4 cars over 1300 cc up to and including 2000 cc
H12	Historic Category 4 cars over 2001 cc
H13	Historic Rally Cars complying with Appendix K not able to comply with Motorsport UK Tyre and Wheel Regulations
H14, H15 & H16	Historic Category 5 cars

For any vehicle constructed in the last 15 years which is, ***or is capable of being,*** homologated, the minimum weight will be as defined in the FIA International Regulations.

6.2 Cars with forced induction will have their capacity increased by 70% to establish their class, except where FIA Appendix J, Art 260 applies.

6.3 All cars must comply with current Motorsport UK Technical Regulations and, where appropriate, with FIA Technical Regulations (see also Article 12).

6.4 Competitors may enter only one class. Competitors should refer to the appropriate Championship Regulations for full details of technical requirements.

Article 7 Identification

7.1 Competitors must make space available to the Organisers, on both front doors, for Event and, if applicable, Championship identification (NCR Ch.6 App.1 Art.9.1 and 9.2) as follows:

- The official Event logo/title on rally plates and panels
- The official Championship decals applicable to the Championship in which a competitor is registered
- Dumfries and Galloway Council decals on each side of the car.
- Jas P Wilson Forest Machines decals on each side of the car

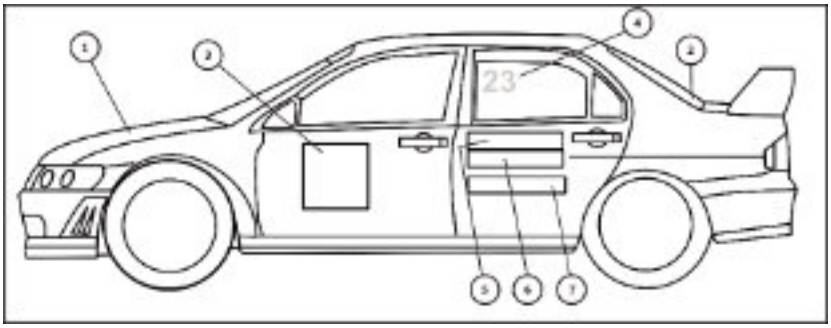

- Plate 1 Front plate (30cm x 21cm)
- Plate 2 Rear window plate (18cm x 18cm)
- Plate 3 Rally panels (50cm x 50cm)
- Plate 4 Orange high visibility numbers (20cm high)
- Plate 5 Dumfries and Galloway decals (28cm x 13cm)
- Plate 6 Jas P Wilson Forest Machines decals (28cm x 13cm)

7.2 Competitors will be identified by Rally Plates and Rally Panels (complying with NCR Ch.13 App.9 Art.5.4 and incorporating competition numbers), which will be provided by the Organisers at the sound test, to be fixed to the front and rear of the car and to both front doors.

7.3 Competitors are reminded that Competition Numbers must be removed after the event or immediately upon retirement.

7.4 High visibility numbers will be supplied by the organisers for fixing to the side windows behind the front doors.

7.5 All competitors are required to affix Event and Championship decals in the prescribed positions as soon as possible after the sound test.

7.6 As this event is likely to be televised, competitors are reminded of Motorsport UK Regulations concerning Tobacco Advertising (NCR Ch.6 App.1 Art.8.1.e).

Article 8 Entries

8.1 The Entry List opens at 18:00 hours on Wednesday 10 June 2026 and closes **at 18.00 hours on Tuesday 7 July 2026**. Entries received after this date may be accepted at the organisers' discretion and may be appropriately accommodated in the running order, but may be omitted from Press Releases and the published Entry List.

8.2 The maximum entry for the event is 120 and the minimum entry is 80. The minimum for each class is 5. Should the minimum figures not be reached, the Organisers reserve the right to cancel the meeting, amalgamate classes or reduce the awards lists as deemed appropriate. They also reserve the right to reduce stage mileage should the minimum number of entries not be reached.

8.3 Entrants are required to indicate on their entry form their eligibility for the various Championships and Awards.

8.4 The order of starting will be at the organisers' discretion (see Article 22.2). To assist seeding, entrants should note their previous results on the Entry Form. A list of scheduled starting times will be posted online at 22:00 hours on 17 July 2026. Starting times will also be sent to competitors by text message on request.

8.5 Competitors are advised that the information they provide will be stored in a computer retrieval system and may be used for organisational purposes.

8.6 The Entry Fee is £985.00. It includes the following:

One road book and one service book available for download on 10 July 2026. (Hard copies of the road book will be available for collection at the event.) One Service plate All car number panels and plates All organiser's advertising decals The rental and installation of a tracking device Legal liability insurance cover

8.7 Rally Office:
RSAC Motorsport Limited
PO Box 3333
Glasgow
G20 2AX

Telephone: 07774 788844
E-mail: office@scottishrally.co.uk

Entries will only be accepted or received online. The Organisers reserve the right to accept or refuse entries at their discretion. All entries will be acknowledged but will not be accepted until after the closing date for entries (see Article 8.9 below), except that entries are guaranteed for registered competitors in the Asset Alliance Group Motorsport UK Scottish Rally Championship who enter before the closing date for entries, subject to the maximum entry level not having been reached.

8.8 The only method of payment is direct bank transfer, referenced with the DRIVER'S FULL NAME, to the following account:
Bank of Scotland, sort code 80-07-74, account number 00993025, account name RSAC Motorsport Limited.

8.9 Entries must be withdrawn in writing. Withdrawals must be addressed to the Secretary of the Meeting at the Rally Office (Article 8.7). Entry fees may be refunded, less an administrative charge of £50, up to 10 July 2026. Entry fees will not be refunded after this date unless the event is cancelled, in which case

an administrative charge of £50 will be made, or if an entry made under Article 8.7 above is not accepted, in which case the entry fee paid will be refunded in full.

8.10 The Secretary of the Meeting must be advised in writing at the Rally Office (Article 8.7) of any modifications to entries.

Article 9 Officials

9.1 Organising Committee:
Andrew Bryce, Keith Butler, Maisie Clingan, Peter Clingan, Keith Cowan, Ron Cowan, Alan Dalziel, Owen Duncan, James Elliot, John Findlayson, Helen Gentleman, John Harrington, Garry Headridge, Pete Lawrence, Jonathan Lord, Graeme Mack, George Malloch, John More, Rab McDonald, John Macfarlane, Paddy McKay, Robin Nicolson, Andrew Pemberton, Graham Provest, Alistair Reid, Ian Smith.

9.2 Stewards of the Meeting:

Appointed by Motorsport UK:	Richard Crozier
Appointed by the Organisers:	Gordon Hood, Brian Kinghorn

9.3

Motorsport UK Safety Delegate:	Nicky Moffitt

9.4 Senior Officials:

Clerk of the Course:	Jonathan Lord Motorsport UK Licence Number: 34
Deputy Clerks of the Course:	John More (Headquarters) Motorsport UK Licence Number: 35792 Graham Provest (Operations) Motorsport UK Licence Number: 41335
Chairman of the Organising Committee:	Ron Cowan
Chief Scrutineer:	Rab McDonald Motorsport UK Licence Number: 72
Scrutineers:	Jim Gibson, Willie Greig, Gordon Hay, Gail Hislop, Jock Hislop, Campbell Jamieson, Sheila McDonald
Environmental Scrutineer:	Peter Clingan Motorsport UK Licence Number: 140296
Competitors' Relations Officer:	Susan Shanks
Event Safety Officer:	Ron Cowan
Deputy Safety Officer:	Bob Webster
Chief Spectator Safety Officer:	George Malloch
Chief Medical Officer:	Andrew Bryce
COVID-19 Officer:	Dr John Harrington
Recovery Co-ordinator:	John Macfarlane
Secretary of the Meeting:	Helen Gentleman
Chief Communications Officer:	Pete Lawrence
Chief Timekeeper:	Ian Smith
Tracking Officer:	Craig Parry
Deputy Chief Timekeeper:	Richard Blackshaw
Chief Results Officer:	John Findlayson
Computer Results Service:	Brian Thomson
Safeguarding Officer:	Rhona Dickie
Chief Marshal:	Keith Cowan
Stage Commanders:	Wilma Davidson, Craig Fisher, John Jones
Service Area Commander:	Alistair Reid
Deputy Service Area Commander:	Stewart Paton
Chief Equipment Officer:	James Elliot

Deputy Chief Equipment Officer:	Stuart Drynan
Transport Manager:	Owen Duncan
Webmaster:	Paddy McKay
Media Officers:	Maisie Clingan and Ken Rundle

Article 10 Results

10.1 Provisional Results will be published within two hours of the last car finishing the event. Any protest must be lodged in accordance with NCR Ch.2 App.9. Appeals must be made in accordance with NCR Ch.2 App.4.

10.2 Competitors shall ensure that they and their cars are available for inspection in the event of a protest being submitted in accordance with NCR Ch.2 App.9 Art.2. If the protested vehicle is not available for inspection the competitor may be disqualified from the results.

10.3 The time limit for a protest regarding the eligibility of any vehicle or part of a vehicle (NCR Ch.2 App.9 Art.1.14) shall be 30 minutes from the time recorded at the Final Control by the last competitor to complete the rally.

10.4 Crews shall make themselves available for electronic communication until the period of protest has expired.

Article 11 Route/Road Book/Documentation

11.1 Time cards will be issued at MC 0. These will be completed by marshals and will be collected at Passage Controls.

.

11.2 The rally will start from Jas P Wilson Forest Machines, Dalbeattie. Cars will start at one minute intervals. Any competitor not signed on electronically thirty minutes before their due start time may not be allowed to start. The rally will finish at Jas P Wilson Forest Machines, Dalbeattie.

11.3 The rally will contain six Special Stages with a mileage of approximately 44 miles on Forestry and Land Scotland land linked together by road sections totalling approximately 120 miles on public and private roads. Stages will be timed to an accuracy of less than one minute.

11.4 Entrants will be supplied with a detailed 'Tulip' Road Book which will be made available to download from 10 July 2026 along with Bulletins and Competitors' Information. Information on where to download the file will be provided to the nominated recipient of all documents as shown on the Entry Form.

11.5 The Rally route will be contained on the following Ordnance Survey map sheets:
Landranger - 1:50 000 Sheet Numbers 83 and 84
Road Map - 1:250 000 Sheet Number 3

11.6 Servicing will only be permitted in specified areas (see Article 17).

11.7 The Organisers may establish checks along the route in accordance with NCR Ch.13 App.2 Art.2.12.

Article 12 Scrutineering and Documentation

12.1 All competitors must initially report to the Sound Test Control, which will be open between 15:00 and 20:30 on Friday 17 July at Jas P Wilson Forest Machines, Dalbeattie, in accordance with the timetable published by the Organisers. This will immediately be followed by the affixing of decals.

12.2 Scrutineering will be held on Friday 17 July between 15:30 and 21:00 hours at Jas P Wilson Forest Machines, Coast Road, Dalbeattie, DG5 4QU. All competitors' cars and personal equipment will be subject to detailed scrutineering. All cars may be subject to further scrutineering at any time during the

event at the discretion of the Chief Scrutineer and the Clerk of the Course. At Scrutineering, cars will be examined for compliance with the current Motorsport UK Tyre, Technical and Safety Regulations as well as for Class and Award eligibility. Each Entrant and Driver will be assumed to have full knowledge of the car and its eligibility for the class entered. In special cases, scrutineering facilities may be available on the morning of Saturday 18 July by arrangement with the Rally Office.

12.3 A validated Motorsport UK Rally Special Stage Vehicle Log Book or Vehicle Passport must be made available for each car at Scrutineering and on demand throughout the event. Failure to produce this document will lead to a refused start or disqualification (NCR Ch.13 App.16 Art.2.1.c).

12.4 FIA Homologation Forms valid for 2026 International Rallies must be made available at scrutineering, and on demand throughout the event, for each FIA homologated car.

12.5 No competing car may carry more than one physically disabled person, whose participation in the competition must be approved by Motorsport UK. The FIA non-ambulant logo should be affixed on both sides of the vehicle adjacent to the door number (NCR Ch.6 App.2 Art 9.7).

12.6 A valid MOT Test Certificate (or digital equivalent) must be produced at Scrutineering for any car required by law to have such a certificate. Failure to produce this certificate will lead to a refused start (NCR Ch.13 App.16 Art.2.1.b).

12.7 All cars shall have Fire Extinguishing systems conforming to the 2026 Motorsport UK requirements (NCR Ch.7 App.6). Crash helmets will be examined for conformity with current regulations (NCR Ch.9 Art.7) and must be worn on Special Stages (NCR Ch.13 App.10 Art 7.6).

12.8 The approved quantity of tyres for this event is ten (NCR Ch.13 App.16 Art.7.11). Competitors are responsible for recording details of the tyres used on a form which will be included in the Road Book and must be handed in at the finish of the event or upon retirement.

12.9 Cars shall have fitted, and the Driver and Co-driver shall use correctly fitted, seat belts in conformity with NCR Ch.7 App.7 and NCR Ch.13 App.10 Art 7.6 and FHR devices in conformity with NCR Ch.9 Art.10 and NCR Ch.13 App.10 Art.7.7.

12.10 Drivers and Co-drivers are reminded that they must wear flame-resistant overalls on all Special Stage Rallies (NCR Ch.9 Art.3 and Ch.13 App.10 Art 7.7), which must cover from ankle to wrist to neck. Scrutineers will be present at the start of Special Stages to check conformity with Articles 12.7, 12.8, 12.9 and 12.10.

12.11 Installation of in-car video cameras will form part of the scrutineering process. Competitors may be issued with a Sponsor's logo, which must be located on the dashboard of the car centrally in clear view of the camera. The equipment must be fitted when the car is presented for Scrutineering (NCR Ch.13 App.16 Art 12.13). Competitors found to be carrying a camera during the event without having followed the above procedure will be disqualified from the results and referred to Motorsport UK. Cameras that are affixed to the outside of the vehicle by temporary fixing devices including, but not limited to, suction devices, must also be attached to a permanent bracket or non-removable bodywork by means of a restraining strap. Cameras that extend outside the extent of the door mirrors when viewed from the front of the vehicle are prohibited. It is a condition of being permitted to carry a video camera that the competitor agrees to make any footage available to the Organisers if requested to do so by the Clerk of the Course.

12.12 Any crew requiring a Turbo to be sealed must inform the Secretary of the Meeting at the Rally Office (Article 8.7) no less than five days before the event to arrange a suitable appointment. Failure to comply with this regulation will be penalised by a fine of £40.

12.13 Judges and/or Driving Standards Observers will be appointed to report on sound levels. Excessive sound will include instantaneous occurrence of noise such as that produced by backfiring caused by anti-lag systems. The penalty for excessive sound may go as far as disqualification.

12.14 All cars must carry an environmental Spill Kit. The presence of these kits will be checked at Scrutineering, and any crew not in possession of a kit will be refused a start. Failure to carry a Spill Kit during the event will be penalised by disqualification.

12.15 All cars will be fitted with a tracking device immediately prior to the start control (MC 0). In association with Sporttraxx and onthepacenote, the rally will operate a mandatory GPRS safety tracking system that will enable the speed and position of each competing vehicle to be monitored and logged during the rally.

- Before the start, all cars will be fitted with a tracking device that will remain active throughout the event. This must be retained in the car until the finish where it will be removed by a Sporttraxx representative.
- If a competitor retires during the event, the device must be returned to the Organisers on the day of the rally, preferably direct to Rally Headquarters.
- Failure to return the tracker or any damage caused to the unit will result in a £300 penalty to replace the unit.
- If the tracker is not returned or payment has not been made for loss or damage to the unit, the crew will be reported to Motorsport UK (NCR Ch.2 App.11 Art.1.3) and their licences suspended until payment is made or the tracker has been returned.
- The contact for all tracking matters is Craig Parry, telephone 07977 234790.

12.16 Documentation will take place electronically.

12.17 Rally HQ is at Jas P Wilson Forest Machines, Coast Road, Dalbeattie, DG5 4QU. (GPS: 54.9209 N, 3.8170 W). The Official Notice Board will be available on Sportity for the duration of the event.

Article 13 Damage Declaration

13.1 Competitors will be required to complete and sign electronically a report declaring whether they have been involved in any incidents resulting in damage to private property and/or injury to persons or animals, or alternatively giving details of any such incident where damage or injury has occurred (NCR Ch.13 App.13 Art.14.4). Any information given will not incur a penalty, but failure to submit a duly completed form online will be penalised by disqualification and may be reported to Motorsport UK for further disciplinary action. The competitor is responsible for the payment of any insurance excess up to a maximum of £450 levied upon the Organisers as a result of any claim by a third party.

13.2 Competitors who do not report to the finish of the event are required to complete the report online within 72 hours of the finish of the event (NCR Ch.13 App.13 Art.14.5).

13.3 If competitors have been involved in an incident they must supply full details to the Organisers on the day of the rally. Competitors who fail to comply will be penalised in accordance with NCR Ch.13 App.13 Art.14.4, and may be reported to Motorsport UK for further disciplinary action.

Article 14 Driving Standards Observers/Judges of Fact

14.1 Named Judges of Fact, appointed by the Organisers, will be on duty throughout the rally to observe and report upon any Competitor considered to be in contravention of NCR Ch.13 App.2 Art 4.40.

14.2 Scrutineers appointed for the event (Article 9.4) are Judges of Fact in respect of vehicle eligibility and Articles 12.7, 12.8, 12.9 and 12.10 of these Regulations.

14.3 Start Line Officials on all Special Stages will be empowered to judge whether or not any Competitor has made a false start.

14.4 The Organisers will appoint Driving Standards Observers in accordance with NCR Ch.5 Part B App.6 and Ch.13 App.2 Art.4.41.

14.5 Any notified offence, by a Competitor or by their Service Crew, which involves speeding, reckless driving or failing to observe road signs will automatically be considered as a possible contravention of NCR Ch.2 App.1 Art.1.5. The Competitor concerned is liable to be penalised in accordance with NCR Ch.13 App.8 Art 1.3(k and l), and NCR Ch.13 App.18 Art.1.14 and to be called before a Motorsport UK Disciplinary Tribunal.

Article 15 Controls and Timing

15.1 "UK" Target Timing as defined in NCR Ch.13 App.13 Art.9.1 will be used on this event.

15.2 All clocks will be set to British Summer Time (BST), using BBC or British Telecom time signals.

15.3 The Organiser's times and distances will be deemed to be correct. Controls and checks, except Special Stage Start Controls, will open 15 minutes prior to the due arrival time of the first car. Special Stage Start Controls will open at the times published in the Route Information Schedule contained in the Road Book. All Controls will close 15 minutes after the due arrival time of the last Competitor still running, having taken into account any delays (NCR Ch.13 App.13 Art.10.1d).

15.4 Competitors must be ready to start a Special Stage at the provisional Start time entered at the Special Stage Arrival Control and/or when instructed by the Start Marshal (NCR Ch.13 App.10 Art.7.36, App.13 Art 6.1, 6.3, App.14(e).

15.5 It is the Competitors' responsibility to ensure that their times are correctly recorded. Should any recorded time not be legible or not appear authentic, the Organisers may use any means at their disposal to establish a time.

15.6 To be classified as finishers, crews must present themselves with their cars at all controls within their permitted maximum lateness (Article 18.4).

15.7 Control and Stage Signs will comply with NCR Ch.13 App.23.

15.8 The Rally will consist of Road Sections and Special Stages.

15.9 **Road Timing** will be to the previous whole minute.
Each road section will be allocated a Target time based on an average speed of 30 mph or less, and Competitors can calculate their Due Time of arrival at any Time Control (TC) by adding this Target Time to their actual time of departure from the preceding TC.

Lateness will be calculated with reference to this Target Time. Therefore, if a Competitor exceeds the Target Time for a road section, lateness will be incurred. Each time Competitors exceeds a Target Time the lateness incurred will be added to their previous lateness to give Cumulative Lateness.

15.10 Special Stage Timing

Special Stage timing will be to the previous second. All Special Stages will have a bogey time set at an average speed of 75 mph. Bogey Times will be indicated in the Road Book and on the Time Cards. Competitors will receive penalties on Special Stages as follows:

Under Bogey	Bogey Time
Over Bogey	Actual Time Taken
Over Stage Maximum	Stage Maximum

Time in excess of Stage Maximum Time on a Special Stage will count towards Competitors' Cumulative Lateness.

Competitors are referred to NCR Ch.13 App.2 Art.4.24 and 25 for details of penalties which may be awarded in the event of a Special Stage being stopped. The two groups of Competitors defined in Article 22.2 may be given different notional times in accordance with NCR Ch.13 App.2 Art.4.34 and 4.37.

Should any Special Stage be cancelled during the event or removed from the results after the event, only the Stage Penalties will be deleted. Unless an Official Bulletin has been issued to the contrary, the cancelled stage must be traversed within Target Time, and will in every other respect be treated as a Road Section.

15.11 Red Signal Procedure

The event will use Motorsport UK Red Signal procedure on stages where extreme circumstances make it necessary to authorise the movement of non-competing or rescue vehicles before the stage is cleared of competing cars. These will be located at mid-stage rescue points, all locations where a rescue/emergency vehicle may re-enter the stage following a shortcut and at designated radio points. Competitors are reminded to read and understand the Red Signal procedures as prescribed in NCR Ch.13 App.2 Art.4.17 and App.10 Art.7.31-33. On passing a Red Signal displayed by a Marshal wearing a Marshals' tabard, the driver MUST immediately and significantly reduce speed as well as being prepared to stop at any time; at no time must they overtake any safety vehicle they encounter on the special stage route. The driver must then follow the instructions of any marshals and/or stage safety personnel and maintain this reduced speed until leaving the special stage. Failure to comply with this rule will incur a penalty at the discretion of the Clerk of the Course.

15.12 Time Controls

Marshals are responsible for filling in Competitors' Time Cards. Displays will be at all Time Controls showing the time allocated by the Marshal.

Time Controls are classified as follows:

MAIN TIME CONTROL (MC)
The MC at the Start, or after any other specified point, will be designated as a MC (OUT).
The MC at the Finish, or before any other specified point, will be designated as a MC (IN).

At a MC (OUT) Competitors will start, or restart, at one minute intervals either in numerical order, or in order of their arrival at the preceding MC (IN) or as may be determined by the Organisers.

Each Competitor will be given a due starting time from any MC (OUT) and any difference between this time and their actual starting time will be counted towards cumulative lateness. A time penalty will also be applied.

Competitors arriving at any MC (IN) within their maximum permitted lateness will, subject to Article 15.6 above, restart from the associated MC (OUT) with Zero lateness. Lateness is only accumulated between two successive MCs.

TIME CONTROL (TC)
Competitors will receive a time in hours and minutes.

SPECIAL STAGE ARRIVAL CONTROL (SSA)
On arrival, Competitors will see the time of arrival on the display. The provisional start time will normally be three minutes later than the arrival time. The area between the SSA and SSS is Parc Fermé. Competitors who arrive early may wait outside the control area (NCR Ch.13 App.13 Art.3).

After clocking in at the SSA, Competitors must proceed immediately to the Stage Start Control or follow Marshals' instructions.

SPECIAL STAGE START CONTROL (SSS)
At the SSS, Competitors will see a combined time display and traffic light. The start time will be shown in hours and minutes once entered by the Marshal. This will normally correspond to the provisional start time calculated from the arrival time. As each section is timed separately, the time taken from SSA to SSS is "Dead Time" and delays are automatically allowed for.

The Start will be signalled by the traffic lights which will go from RED (15 seconds to go) to AMBER and RED (10 seconds to go). RED goes out at 5 seconds and AMBER counts down 5-4-3-2-1 to GREEN at the start time. In the event of failure, the start procedure will revert to the manual system described in Motorsport UK NCR Ch.13 App.10 Art.7.36.

SPECIAL STAGE FINISH CONTROL (SSF)
The time transmitted from the Flying Finish along with the car number will be shown on the display at the stop line in hours, minutes and seconds.

Competitors must stop at the Stop Line. Any competitor who fails to stop at the Stop Line must return on foot. Reversing the car is prohibited and subject to the penalty of disqualification. (NCR Ch.13 App.10 Art.7.28 and App.8 Art.1.3(p))

SERVICE CONTROL (SV)
Service Areas will have 'IN' and 'OUT' Time Controls. A Target Time will be specified between these controls. The section between SV (IN) and SV (OUT) will be marked as a Road Section.

REGROUP CONTROLS
Regroup areas may be set up along the route. Their entry and exit controls are subject to the general rules governing controls. The purpose of these regrouping areas will be to reduce the intervals which may have occurred between competing cars as a result of late arrivals and/or retirements. On their arrival at these regrouping controls, the crews will receive instructions on their restart time. They must then drive their car immediately and directly to the parc fermé. Engines must be stopped.

Each Competitor will be given a due starting time from any Regroup TC (OUT) and any difference between this time and their actual starting time will be counted towards cumulative lateness. A time penalty will also be applied. Exceptionally, the Organisers may delay departure from Regroup TC (OUT) in order to manage gaps within the running order, in which case the delay will not be counted towards cumulative lateness and there will be no time penalty.

Cumulative lateness will NOT be reduced to zero at Regroups. Competitors arriving at any Regroup TC (IN) with cumulative lateness will, subject to Article 15.6 above, restart from the associated Regrouping TC (OUT) with the same amount of cumulative lateness. Lateness is only accumulated between two successive MCs.

Competitors may check in in advance of their due time at the MC (IN) at the finish of the rally in accordance with NCR Ch.13 App.13 Art 3.9c. There will be a holding control prior to the finish, at which early check-in is not permitted.

15.13 Other Controls

Other controls are classified as follows:

PASSAGE CONTROL (PC)
At certain points indicated in the Road Book, the Organisers may establish a PC. Competitors failing to provide the necessary documents at any PC will be deemed not to have reported there and may be disqualified (NCR Ch.13 App.8 Art.1.3(a) and Articles 15.5 and 15.6). Any times recorded at a PC will be used only to ensure that Competitors have followed the requirements of the Road Book, and not to calculate Cumulative Lateness.

ROUTE CHECK (RC)
The Organisers may also establish checks along the route in accordance with NCR Ch.13 App.2 Art.2.12.

15.14 Practice Event

RSAC Motorsport Limited will promote an Interclub Permit Special Stage Practice Event. Any competitor who retires from the main event will be permitted to re-start (following satisfactory re-scrutineering and at the Organisers' discretion) in a practice event on Saturday 18 July 2026. Any crew which fails to

complete earlier stages may, **at the discretion of the Clerk of the Course,** restart the rally from TC 3B or TC 5B (Service Out). The intention to restart must be made to Rally HQ via the CRO and the reason for retirement advised. The car must be presented for re-scrutiny prior to re-start. A re-start time will be issued by Rally HQ. Competitors in the practice event will run as close to seeded order as possible and within, but not ahead of, 15 places of their original seeded position (NCR Ch. 13, App. 13, Art. 15). Competitors in the practice event must be the same driver, navigator and car as originally started the main event. No results will be published, and no awards will be presented for this event. All other regulations apply as written. The organisers reserve the right to halt the practice event at any time. Penalties will be applied in accordance with NCR Ch. 13, App. 13, Art. 12.

Article 16 Subjective Route Notes

16.1 Pre-event practising or testing over the Special Stages on this event is forbidden (NCR Ch.13 App.9 Art.1.7 and App.12 Art.3.27). The organisers may at their discretion and with the agreement of the Stewards of the Meeting refuse a start to any competitor who is found to have carried out unauthorised practice or reconnaissance over the route of any Special Stage. Those living on a Special Stage, or who may have cause to drive along a Special Stage for whatever reason, should inform the organisers in advance.

16.2 The possession of pace notes, as defined in NCR Ch.1 App.1, by a Competitor during the course of the rally, whether or not they relate to the stages being used on the rally, is forbidden. This does not preclude the use of Ordnance Survey Maps specified in the regulations as being necessary to complete the route.

16.3 Subjective Route Notes

16.3.1 Competitors may purchase subjective route notes from Scotmaps or onthepacenote. Only the Route Note Documents provided for the 2026 event by Scotmaps or onthepacenote may be used (NCR Ch.13 App.10 Art.7.42). This does not, however, preclude competitors from making notations thereon to suit their own purposes. In all circumstances, competitors are advised that the Organisers accept no liability or responsibility whatsoever in the use of the subjective route notes.

16.3.2 Contact details for Route Note suppliers:

Scotmaps (SRC official supplier)
Telephone: 01356 667090
Mobile: 07767 602855
E-mail: bill@scotmaps.co.uk
Website: www.scotmaps.co.uk

onthepacenote
Telephone: 07977 234790
E-mail: onthepacenoteuk@gmail.com
Website: www.onthepacenote.co.uk

16.4 The Organisers may set up checks at certain locations where Competitors and competing cars will be searched. The penalty for being found in possession of unauthorised pace notes, or refusing to allow a search for these to be made, is disqualification, in accordance with Article 18.4(q) of these Regulations. The Organisers request the co-operation of all Competitors in order to reduce any delay.

16.5 From the date of publication of these Regulations, where it is established that a Competitor or Entrant, their agent, representative or any other person has caused, arranged, or directed to be carried out unauthorised reconnaissance, inspection or noting, in any form, within the area covered by maps listed in these Regulations before Competitors have covered the stages, the Competitor concerned will be disqualified from the results or refused permission to start, as appropriate to the case, and will be reported to Motorsport UK (NCR Ch.13 App.9 Art.1.7). The only exception to this Regulation will be for

persons who live on, or whose employment causes them to travel along, a road used on the event (Article 16.1).

Article 17 Servicing

17.1 Servicing is defined as work being carried out on the car by any person other than the competing crew, or the use of any part or tool not carried in the competing car (NCR Ch.13 App.18 Art.1). Servicing will only be permitted in the official service area at Jas P Wilson Forest Machines, Dalbeattie by official service vehicles, identified by official plates, in areas set aside for this purpose by the Organisers. The use of management vehicles is **prohibited**.

17.2 The main service park is on tarmac/gravel at Jas P Wilson Forest Machines, Dalbeattie, where all teams will be allocated a service bay measuring 8 metres x 8 metres. One Service vehicle will be permitted per competing car. The Service vehicle, the trailer and the competing car must all together fit within the allocated bay. Requests for additional space must be made in writing to the Organisers. Such space, if available, will be allocated on a 'first come. first served' basis, and the Organisers may make an additional charge to accommodate such requests. Additional space will not be provided for trailers, which must be removed to the trailer park (Article 17.13).

17.3 Each Service vehicle must be registered with the Organisers by giving its vehicle registration number. An official plate will be issued for each vehicle. This plate must be affixed to the bonnet or exterior surface of the windscreen of the vehicle in clear view. It is not sufficient to leave the official plates lying on the dashboard. The use of a Service Plate on a vehicle not previously registered with the Organisers is an offence for which a penalty of disqualification will be applied.

17.4 Service Areas will only be accessible to Competitors and Service vehicles bearing Official Plates. All other areas will be 'out of bounds' to Service Crews and their vehicles. If a Service vehicle is observed in any such area, whether it is the vehicle registered in accordance with Article 17.3 or otherwise, the associated competing car will be disqualified in accordance with Article 18.4(o) of these Regulations. Servicing off route is strictly forbidden. Smoking in Service Areas and Refuelling Zones is strictly forbidden.

17.5 Crews may work unassisted on their own cars, using only tools and spare parts carried in their car, in 'No Service' Areas, except:

- within 100 metres of any Control
- between a Special Stage Arrival Control and a Special Stage Start Control
- in any Parc Fermé

The only work permitted in these areas is to carry out the following unassisted:

- clean lamp glasses, windscreens, windows, identification markings and vehicle registration numbers.

The only exception to this will be in Parc Fermé on safety grounds, when work may be carried out with written permission from the Clerk of the Course, provided that the repair work is supervised by a scrutineer.

17.6 Service Crew will be subject to the same regulations as Competitors regarding noise, driving manners, etc., and Judges of Fact and Driving Standards Observers will be instructed to note any infringements. Competitors are responsible for ensuring that their Service Crew Personnel understand and comply with this Regulation**. For the avoidance of doubt, any verbal or physical abuse towards any Rally Officials by Service Crew may result in penalties being given to the Competing Crew up to and including disqualification (NCR Ch.13 App.18 Art 1.14).**

17.7 Service vehicles must park as directed by marshals at the Service Area. Failure to comply will result in penalties which may go as far as disqualification.

17.8 Any crew operating a management vehicle (Article 17.1) at any point during the event will be penalised in accordance with Article 18.4(o). Judges of Fact will be appointed to report breaches of this Regulation.

17.9 All competitors must use an impermeable tarpaulin sheet under the car they are servicing. This applies in all Service Areas. Failure to comply will be penalised by a time penalty of 10 minutes for the first offence, a time penalty of 20 minutes for the second offence and disqualification for a third offence.

17.10 All competing crews must use a refuel zone at each service area. Vital Equipment will be attending the event.

Competitors wishing to order fuel from Vital Equipment should telephone 01981 241169 or use the order form at:
https://www.vitalequipment.co.uk/ .

17.11 The use of any form of pin to secure structures on the tarmac at Jas P Wilson Forest Machines, Dalbeattie is strictly prohibited. Failure to comply will be penalised by a fine of £250 per pin. The responsibility for the cost of any repairs to the tarmac surface at Jas P Wilson Forest Machines, Dalbeattie (howsoever caused) will rest with the competitor concerned. The use of pins in the gravel areas at Jas P Wilson Forest Machines, Dalbeattie should be avoided.

17.12 The use of helicopters, drones or light aircraft by any competitor or persons associated with any competitor over the route or stages used during the duration of this event is prohibited. Breach of this regulation will be penalised by disqualification and offending competitors will be reported to Motorsport UK in accordance with NCR Ch.13 App.18 Art.3.3.

17.13 There will be a separate trailer park in the vicinity of Jas P Wilson Forest Machines, Dalbeattie. The Organisers are not responsible for loss of, or damage to, any trailer so parked.

17.14 Cars must be fitted with towing eyes at front and rear (NCR Ch.13 App.16 Art 3.14) to allow recovery by official licensed vehicles. Recovery vehicles will only tow competition cars as far as the forest exit, as the terms of their insurance do not permit towing on the public highway. From this point onwards, recovery is the responsibility of competitors and their service crews.

Article 18 Penalties

18.1 Competitors will start with zero penalties. Classification for the results will be determined by total time penalties, the winner being the Competitors with the fewest total time penalties.

18.2 In the event of a tie, the winners will be the Competitors who have completed the greatest distance from the start with the fewest Stage Penalties.

18.3 To be classified as finishers, Competitors must complete all special stages and report to all controls without accumulating over 15 minutes of lateness or incurring a penalty of disqualification.

18.4 Penalties will be applied in accordance with NCR Ch.13 App.8 Art.1.3 as amended below:

a) Lateness	
For every minute late at the MC (Out) at the start of the event	**1 minute**
For every minute early at the MC (Out) at the start of the event	**2 minutes**
Arriving at the MC (In) at the event finish with up to and including 15 minutes' accumulated lateness	**No penalty**
Arriving at the MC (In) at the event finish with more than 15 minutes' accumulated lateness	**Elimination from the results**
b) Regrouping Controls	
For every minute late at a Regrouping (Out)	**1 minute**
For every minute early at a Regrouping (Out)	**2 minutes**
c) Recording less than the Bogey Time for a Special Stage	**Bogey Time**

	for that stage
d) Exceeding the Bogey Time for a Special Stage	**Actual time recorded for that stage**
e) Exceeding the Maximum Time for a Special Stage by up to 15 minutes *The difference between the actual time and the Maximum Time will count towards maximum lateness.*	**Maximum Time for that stage**
f) Exceeding the Maximum Time for a Special Stage by more than 15minutes	**Disqualification**
g) For each minute under the Target Time for a Road Section	**1 minute**
h) Taking an incorrect route on a Special Stage	**Disqualification**
i) Not complying with a requirement of the Road Book or these Regulations for which no penalty has been specified	**30 minutes**
j) Not complying with an instruction of an official provided that warning is given that a penalty will be applied	**30 minutes**
k) Breach of statutory requirements concerning the driving of a motor vehicle:	
1st Offence	**30 minutes**
2nd Offence	**Disqualification**
l) Excessive noise or damaged or ineffective silencing system. (This will be measured in accordance with Motorsport UK Regulations Ch.5A Art.21.1, Ch.7 App.8 Art.3 and Ch.13 App.1 Art.7)	
1st Offence	**30 minutes**
2nd Offence	**Disqualification**
m) Causing an obstruction on an access road to a special stage or on a special stage	**Disqualification**
n) Not reporting at or providing proof of visiting a check or control	**Disqualification**
o) Servicing in an area not specifically designated for this purpose	**Disqualification**
p) Technical non-conformity	**Disqualification**
q) Contravention of Article 16.4 or 16.5 of these Regulations (Pace Notes/Reconnaissance)	**Disqualification**
r) Failure to arm plumbed-in fire extinguisher system or to wear correctly fitted seat belts, crash helmets, flame-resistant overalls and FHR devices at a time when it is mandatory for both crew members to wear crash helmets (Articles 12.7, 12.9 and 12.10).	**Disqualification**
s) Failure to carry an environmental Spill Kit	**Disqualification**
t) Use of helicopter, drone or light aircraft	**Disqualification**

Article 19 Awards

19.1 GENERAL CLASSIFICATION (All prizes to be won outright with the exception of the Trophies):

1st THE WEIR TROPHY, THE MOTOR WORLD TROPHY. Souvenir award to driver and co-driver.
2nd THE ALEXANDER TROPHY. Souvenir award to driver and co-driver.
3rd THE NEIL FERGUSON AND SON TROPHY. Souvenir award to driver and co-driver.

19.2 CLASS AWARDS:

1st in each Class Souvenir award to driver and co-driver
2nd in each Class Souvenir award to driver and co-driver
(Winners of overall awards are ineligible for class trophies and awards.)

In any class with fewer than four competitors, there will be no award for second in class.

19.3 LADIES' AWARD (The driver must be female):

1st THE SCOTSMAN TROPHY. Souvenir award to driver and co-driver.

19.4 OTHER TROPHIES AND AWARDS

THE RSAC MOTORSPORT SCOTTISH HISTORIC QUAICH – to the crew of the highest placed Historic car in general classification.
THE SUSAN CAMERON TROPHY – to the highest placed female co-driver in general classification.
THE HUGH McNEILL TROPHY and award - to the highest placed Scottish born co-driver taking part in their first Scottish Rally.
THE HUNTER FORBES TROPHY - to the co-driver of the car which is first in general classification.
THE PROVOST MARSHAL'S TROPHY and awards - to the highest placed Armed Forces crew.
THE ARMY IN SCOTLAND QUAICH and awards - to the highest placed Armed Forces crew.
THE SHEILA ALEXANDER TROPHY and awards - to the highest placed Land Rover.
THE DAVID LEEDHAM TROPHY - to the highest placed Armed Forces driver taking part in their first Scottish Rally.
THE BANDEATH TROPHY and awards - to the "Star of the Rally", who will be nominated by the Clerk of the Course.

Article 20 Insurance

20.1 Competitors are responsible for ensuring they have appropriate insurance cover in place for their activities whilst travelling to and from the Event, as well as during the Event itself.

20.2 The Motorsport UK Master Public Liability policy provides third party cover for activities falling under the Event Permit, but this policy specifically excludes any form of Road Traffic Act liability. An additional third party "top-up" insurance policy, administered by Motorsport UK, is available to add-on for this Event which offers cover for Road Traffic Act liability for any sections of the Permitted Event that take place on the public highway. This policy provides cover to complement but not replace your own motor insurance.

20.3 The acceptance criteria for this scheme are as follows:

- Drivers must be aged 19 years or older
- Drivers must be UK residents for over 1 year, and have held a Full UK Car Licence for at least 6 months
- Drivers must have not been banned from driving in the last 5 years, and no criminal convictions
- Drivers must have no more than 6 penalty points on their licence and/or no more than 1 fault motor claim in the last 3 years in their history
- Drivers must be a named driver on a valid motor insurance policy for the vehicle they are driving
- Drivers must not already have the 3rd Party Extension (top-up) for Road Sections cover already on their existing motor policy
- Vehicles must have a valid MOT and taxed for the road (unless exempt from doing so)
- Vehicles must be road going/road legal and have a UK Registration Plate assigned and attached
- Vehicles must be in the custody or control of the competitor and be participating in a motorsport event permitted by the Policyholder (Motorsport UK Association Ltd)

Competitors who do not comply with any of the above criteria must contact Kingfisher Motorsport at motorsportuk@kingfishermotorsport.com as early as practically possible in advance of the event to discuss their application to confirm whether cover can still be offered and whether there are any additional terms.

All Competitors will be required to sign a declaration before the Event to confirm that they either have adequate insurance cover for the Event or need cover under the Motorsport UK top-up policy. If they do not meet the minimum eligibility criteria, they must have referred themselves to and been approved by Kingfisher before the start of the Event.

Those Competitors who do require cover under the Motorsport UK top-up policy will be required to pay the organisers an additional fee to cover the Motorsport UK permit surcharge.

Article 21 Medical Assistance (NCR Ch.13 App.10 Art.7.10-23 and App.20 Art.3)

21.1 Competitors must carry an A4 size white board with a red 'SOS' on one side and black 'OK' on the other. The letters must be a minimum of 12 cm high with a minimum stroke width of 1.5 cm. In the case of an accident where urgent medical attention is required, where possible the red 'SOS' board should be immediately displayed to the following cars and to any helicopter attempting to assist. The SOS function on the tracker should be activated.

Any crew which has the 'SOS' board displayed to them or sees a car which has sustained a major accident where both crew members are seen inside the car but is not displaying the red 'SOS' board, shall immediately and without exception stop to render assistance, and must activate the SOS function on the tracker.

All following cars shall also stop. **The second car at the scene shall proceed to inform the next radio point**. Subsequent cars shall leave a clear route for emergency vehicles. The Clerk of the Course may award a discretionary time to any competitor(s) delayed by making such a report.

Any crew which is able to, but fails to, comply with the rule will be reported to the Clerk of the Course who may impose penalties, and may be reported to Motorsport UK.

In the case of an accident where medical intervention is not required, the 'OK' board must be clearly shown by a crew member to the following vehicles and to any authorised helicopter attempting to assist. If the crew leaves the vehicle, the 'OK' board must be displayed so that it is clearly visible to other competitors.

Each competing car must carry a red reflective triangle which, in the event of the car stopping in a special stage, must be placed in a conspicuous position by a member of the crew at least 50 metres before the car's position, in order to warn following drivers. Any crews failing to comply may be subject to a penalty at the discretion of the Clerk of the Course. This triangle must be placed even if the stopped car is off the road.

The road book will contain a page giving the accident procedure. Any crew retiring from the rally must report such retirement to the organisers as soon as possible, save in the case of force majeure. Any crew failing to comply will be subject to a penalty at the Clerk of the Course's discretion. Competitors who misuse the 'SOS' or 'OK' board will be penalised and may be reported to Motorsport UK for further penalty.

21.2 The penalty for displaying an 'SOS' Board when urgent medical assistance is not required is disqualification, with a report being submitted to Motorsport UK.

21.3 The penalty for not stopping at an 'SOS' Board is disqualification.

21.4 This system does not exempt competitors from the responsibility of advising officials if they are aware of a fellow competitor being off the road or in some difficulty.

Article 22 Seeding

22.1 Competitors should list their driver's best five results on stage events after 1 January 2024 on the entry form to assist with seeding.

22.2 Cars will start in accordance with NCR Ch. 13, App. 2, Art. 4.4b. Classes 9 to 13, H1 and H9 will run at the front of the field numerically in order of anticipated performance with the best performance potential at the front. All other Classes will run numerically in order of anticipated performance following a suitable time gap.

22.3 No discussion regarding seeding will be entered into between any competitor and any event official after the closing date for entries has passed.

Article 23 Child Safeguarding Policy

23.1 RSAC Motorsport Limited's Policy Statement on Child Safeguarding is available at: http://www.rsacmotorsport.com/links-2-2/

23.2 If you have any concerns about child protection while at this event please see the Safeguarding Officer Rhona Dickie or report it to the Clerk of the Course or the Secretary of the Meeting and they will instruct the Safeguarding Officer to contact you urgently.

Article 24 Championship Dates

24.1 The calendar for the 2026 Asset Alliance Group Motorsport UK Scottish Rally Championship is as follows:

Tore Car Sales Snowman Rally	14 February
Border Counties Rally	14 March
Borders Competitions Jim Clark Reivers Rally	24 May
Dunoon Presents Argyll Rally	19-20 June
RSAC Scottish Rally	18 July
Voly Grampian Forest Rally	7-8 August
Galloway Hills Rally	12 September

Championship Regulations and further details are available from the Championship Registrar, Robert Beck, e-mail rb@srcweb.co.uk or from the official Championship website www.scottishrallychampionship.co.uk

Article 25 Accommodation

25.1 For details of accommodation in the Dalbeattie area, contact:

https://www.visitscotland.com/places-to-go/dumfries-galloway

Article 26 Respiratory Infection

26.1 Respiratory Infection (including Covid 19)

There are no longer any Covid restrictions in force in Scotland. Although still present and still a threat to vulnerable patients, it is now best regarded as one of a range of respiratory illnesses in the community.

- Most people will have been vaccinated at some point and routine vaccination is now not being offered to young fit people. However, if you have certain medical conditions, you may still be eligible to receive one - if this is you please do so.
- If you think you may have symptoms suggestive of Covid, it is still best to stay at home for your own sake and to protect others.
- If unwell, please consider not coming to the rally, and follow standard advice https://www.gov.scot/coronavirus-covid-19/. A well fitting face mask is advised. In the event of you not being able to attend, please let the organisers know as soon as possible.

Dr John Harrington
Covid Officer

Appendix 1 Race with Respect

THE SPORT

Motorsport is powered by people – competitors, volunteers, officials, teams and spectators who bring the sport to life every day. Race With Respect is our shared commitment to creating a positive, welcoming environment where everyone involved in motorsport is treated with respect.

Through Race With Respect, Motorsport UK works with the community to promote positive behaviour across the sport – on track, in the paddock and online. It's about setting clear expectations, supporting clubs and organisers, and making sure motorsport remains a place where people feel proud to belong.

Race With Respect Code

Everyone involved in a Motorsport UK event plays a part in creating a positive environment for the sport. By taking part, whether as a competitor, volunteer, official, team member , you agree to follow the values of Motorsport UK's **Respect Code**:

Respect
Integrity
Fair Play
Self-control
Good Manners
Through **#RaceWithRespect**, we ask all members to commit to:

- Helping create a welcoming and supportive environment for everyone involved in the sport
- Acting with integrity and fairness in competition and conduct
- Treating everyone with respect, regardless of background, identity or belief
- Recognising that we all represent the sport and showing respect to officials, volunteers, competitors and fans
- Respecting the rules of the sport and the authority of Motorsport UK officials

We all share responsibility for maintaining high standards of behaviour. If you witness behaviour that falls short of the Respect Code, we encourage you to speak up.
Breaches of the Respect Code may result in disciplinary action.

Report a Race With Respect concern

If you experience or witness behaviour that falls short of the Race With Respect Code, you can report it to Motorsport UK.

Race with Respect code of conduct for Competitors

A socially-minded standard of behaviour is expected from everyone within the motorsport community. We all have a responsibility to follow the values of the Race With Respect Code of Conduct, embodying respect, integrity, fair play, self-control and good manners.

As a competitor I agree to demonstrate RESPECT by:

- Treating everyone with respect regardless of their gender, ethnic or social background, language, religious or other beliefs, disability, sexual identity or status.
- Being polite and respectful to all staff, officials, competitors, volunteers, as well as fans and supporters
- Never engaging in or tolerating offensive, insulting or abusive language or behaviour.
- Respecting my team mates, competitors from other teams and all other participants.

As a competitor I agree to demonstrate INTEGRITY by:

- Always taking part to the best of my ability.
- Behaving responsibly.
- Raising concerns when something isn't right and reporting any incidents of bullying to an Officer of the club or to Motorsport UK.

As a competitor I agree to demonstrate FAIR PLAY by:

- Respecting the rules and regulations, decisions and authority of the officials.
- Not cheating.
- Not breaking or bending the rules

As a competitor I agree to demonstrate SELF CONTROL by:

- Always speaking to other competitors with respect.
- Always being considerate of others and appreciating that everyone has a different level of skill and talent.
- Taking responsibility for my behaviour and the way I speak to other people.

As a competitor I agree to demonstrate GOOD MANNERS by:

- Placing an emphasis on fun and enjoyment, making our sport a friendly and welcoming place to be.
- Celebrating when I win and being gracious when I lose.

In accordance with Ch.1 Art 3 and Ch.2 Art.3, Motorsport UK reserves the right to take appropriate disciplinary action for breaches of these codes of conduct. This may include being asked to leave Motorsport UK affiliated activities and being excluded from future activities.

Appendix 2 Provisional Route

RSAC SCOTTISH RALLY

Route 2.0

Saturday 18 July 2026

TC SS	Location	SS Dist. Miles	Liaison Dist. Miles	Section Time	1st Car Due	
RZ 0	*Refuel - Dalbeattie*					
	Distance to next refuel	*(22.13)*	*(58.67)*			
MC 0	Dalbeattie Jas P Wilson Start				09:00	Section 1
0A			19.67	0:43	09:43	
1			3.58	0:15	09:58	
SS 1	***Barney Water 1***	**8.27**		0:03	***10:01***	
SF 1					10:12	
2			4.91	0:15	10:27	
SS 2	***Glengap 1***	**8.46**		0:03	***10:30***	
SF 2					10:41	
3			26.05	0:55	11:36	
SS 3	***Dalbeattie 1***	**5.40**		0:03	***11:39***	
SF 3					11:47	
3A	Dalbeattie Service In		4.46	0:12	11:59	
	Service A - Jas P Wilson Forest Machines Dalbeattie			0:30		
3B	Dalbeattie Service Out				12:29	
RZ 1	*Refuel - Dalbeattie*					
	Distance to next refuel	*(16.73)*	*(51.81)*			
3C	Regroup In		0.83	0:13	12:42	Section 2
3D	Regroup Out				12:52	
3E			19.13	0:43	13:35	
4			3.58	0:15	13:50	
SS 4	***Barney Water 2***	**8.27**		0:03	***13:53***	
SF 4					14:04	
5			4.91	0:15	14:19	
SS 5	***Glengap 2***	**8.46**		0:03	***14:22***	
SF 5					14:33	
5A	Dalbeattie Service In		23.36	0:50	15:23	
	Service B - Jas P Wilson Forest Machines Dalbeattie			0:30		
5B	Dalbeattie Service Out				15:53	
RZ 2	*Refuel - Dalbeattie*					
	Distance to next refuel	*(5.40)*	*(9.49)*			
5C	Regroup In		0.83	0:13	16:06	Section 3
5D	Regroup Out			0:10	16:16	
6			3.81	0:12	16:28	
SS 6	***Dalbeattie 2***	**5.40**		0:03	***16:31***	
SF 6					16:39	
6A	Dalbeattie Holding In		4.01	0:12	16:51	
6B	Dalbeattie Holding Out				16:53	
MC 6C	Dalbeattie Jas P Wilson Finish		0.84	0:07	17:00	

TOTALS OF THE RALLY

	SS	Liaison	*% of Special Stages*
Total - 6 SS	**44.26**	**119.97**	**26.95**

Sunrise - Glengap	05:02
Sunset - Dalbeattie	21:40

Appendix 1 Race with Respect

A socially-minded standard of behaviour is expected from everyone within the motorsport community.

By participating in a Motorsport UK event in any capacity you agree to follow the values of the Respect Code:

Motorsportuk.org/racewithrespect
#RaceWithRespect

The Values

- Respect
- Fair play
- Integrity
- Good Manners
- Self-Control

I pledge to #RaceWithRespect and:

- Contribute to a welcoming and friendly environment that ensures the safety and welfare of all participants.
- Always behave with integrity and uphold fairness in the sport; play your part in keeping the sport safe through your actions
- Treat everyone with respect, regardless of their gender, ethnic or social background, language, religious or other beliefs, disability, sexual identity or other status
- Recognise that we all represent the sport and therefore have a duty to be polite and respectful to all staff, officials, fellow competitors, volunteers, as well as fans and supporters
- Respect the rules, regulations and authority of the officials and Motorsport UK

Any breach of these obligations may result in disciplinary action.

Race with Respect code of conduct for Competitors

A socially-minded standard of behaviour is expected from everyone within the motorsport community. We all have a responsibility to follow the values of the Race With Respect Code of Conduct, embodying respect, integrity, fair play, self-control and good manners.

As a competitor I agree to demonstrate RESPECT by:

- Treating everyone with respect regardless of their gender, ethnic or social background, language, religious or other beliefs, disability, sexual identity or status.
- Being polite and respectful to all staff, officials, competitors, volunteers, as well as fans and supporters
- Never engaging in or tolerating offensive, insulting or abusive language or behaviour.
- Respecting my team mates, competitors from other teams and all other participants.

As a competitor I agree to demonstrate INTEGRITY by:

- Always taking part to the best of my ability.
- Behaving responsibly.
- Raising concerns when something isn't right and reporting any incidents of bullying to an Officer of the club or to Motorsport UK.

As a competitor I agree to demonstrate FAIR PLAY by:

- Respecting the rules and regulations, decisions and authority of the officials.
- Not cheating.
- Not breaking or bending the rules

As a competitor I agree to demonstrate SELF CONTROL by:

- Always speaking to other competitors with respect.
- Always being considerate of others and appreciating that everyone has a different level of skill and talent.
- Taking responsibility for my behaviour and the way I speak to other people.

As a competitor I agree to demonstrate GOOD MANNERS by:

- Placing an emphasis on fun and enjoyment, making our sport a friendly and welcoming place to be.
- Celebrating when I win and being gracious when I lose.

In accordance with regulation 10.1. Motorsport UK reserves the right to take appropriate disciplinary action for breaches of these codes of conduct. This may include being asked to leave Motorsport UK affiliated activities and being excluded from future activities.

Appendix 2 Provisional Route

RSAC SCOTTISH RALLY

Route 1.3

Saturday 19 July 2025

TC / SS	Location	SS Dist. Miles	Liaison Dist. Miles	Section Time	1st Car Due	
RZ 0	*Refuel - Dalbeattie*					
	Distance to next refuel	*(16.68)*	*(60.34)*			
MC 0	Dalbeattie Jas P Wilson Start				09:00	Section 1
1			22.60	0:48	09:48	
SS 1	*Ken Duff Glengap 1*	9.00		0:03	*09:51*	
SF 1					10:02	
2			25.84	0:56	10:58	
SS 2	*Kinharvie 1*	7.68		0:03	*11:01*	
SF 2					11:10	
2A	Dalbeattie Service In		11.90	0:26	11:36	
	Service A - Jas P Wilson Forest Machines Dalbeattie			0:30		
2B	Dalbeattie Service Out				12:06	
RZ 1	*Refuel - Dalbeattie*					
	Distance to next refuel	*(13.09)*	*(46.24)*			
2C	Regroup In		0.83	0:13	12:19	
2D	Regroup Out				12:29	Section 2
3			3.80	0:12	12:41	
SS 3	*Catherine Higgins Dalbeattie 1*	4.09		0:03	*12:44*	
SF 3					12:50	
4			25.19	0:54	13:44	
SS 4	*Ken Duff Glengap 2*	9.00		0:03	*13:47*	
SF 4					13:58	
4A	Dalbeattie Service In		16.42	0:37	14:35	
	Service B - Jas P Wilson Forest Machines Dalbeattie			0:30		
4B	Dalbeattie Service Out				15:05	
RZ 2	*Refuel - Dalbeattie*					
	Distance to next refuel	*(11.77)*	*(24.69)*			
4C	Regroup In		0.83	0:13	15:18	
4D	Regroup Out				15:28	Section 3
5			10.38	0:24	15:52	
SS 5	*Kinharvie 2*	7.68		0:03	*15:55*	
SF 5					16:04	
6			9.68		16:27	
SS 6	*Catherine Higgins Dalbeattie 2*	4.09			*16:30*	
SF 6					16:36	
6A	Dalbeattie Holding		3.80	0:14	16:50	
MC 6B	Dalbeattie Jas P Wilson Finish		0.83	0:10	17:00	

TOTALS OF THE RALLY

	SS	Liaison	% of Special Stages
Total - 6 SS	**41.54**	**132.10**	**23.92**

Sunrise - Glengap	05:04
Sunset - Dalbeattie	21:40

RSAC
Motorsport

wishes all the very best to Campbell Roy on his Trek 500.

Particularly whilst he is tackling Stage 6 on the 18th July

Trek 500 for Prostate Cancer Research

Campbell Roy is walking 540 miles in aid of Prostate Cancer Research, from the 11th of July to the 26th of September, and he's looking for some company.

Scan the QR code or visit www.prostate-cancer-research.org.uk/trek-500 for dates, routes and to register your interest.

You can donate to Campbell's challenge by visiting www.justgiving.com/page/campbell-roy-trek500forpcr

Rallying for 14 to 17 year olds

Junior Rally Scotland

10 Rounds
4 Training days
Machrihanish
Crail Anglesey
Kames Condor
Forrestburn

1000 junior ECOSSE CHALLENGE

1000cc cars
Full safety equipment
Restricted modifications
Control tyre

Rounds 4 & 5 - July 11th & 12th
Machrihanish
Round 6 - August 16th - Kames

Photos by BeckSport Media, Ben Lawrence Photography & Steven Mitchell-Tog

www.j1000ecossechallenge.co.uk

Forestry and Land Scotland | Coilltearachd agus Fearann Alba

Surprising Discoveries!

Lorgan iongantach!

Extend your Scottish adventure and explore some of our amazing forests and stunning landscapes. Perfect for cycling, walking or simply relaxing!

Follow us on:

Call us on 0300 067 6000
forestryandland.gov.scot

Dumfries and Galloway Council

Dumfries and Galloway Council is delighted to welcome the Scottish Rally back to Dalbeattie in 2026.

To plan holidays and short breaks to Dumfries and Galloway go to:

www.visitscotland.com/destinations-maps/dumfries-galloway/

Dumfries & Galloway COUNCIL